Deploying IBM Flex System into a Cisco Network

- Learn how to integrate IBM Flex System into your network
- See real life Layer 2 configurations with Flex System switches
- Find out how easy it is to connect network devices

Christoph Raisch
Bernd Albrecht
Peter Demharter
Stephan Fleck
Joachim Gross
Ruediger Rissmann
Werner Sponer
Arwed Tschoeke
Pietro Volante

Redpaper

ibm.com/redbooks

International Technical Support Organization

Deploying IBM Flex System into a Cisco Network

February 2013

REDP-4901-00

Note: Before using this information and the product it supports, read the information in “Notices” on page vii.

First Edition (February 2013)

This edition applies to the following switches and firmware levels:

- IBM Flex System EN2092 1Gb Ethernet Scalable Switch: Version 7.2.2.2
- IBM RackSwitch G8264: Version 7.2.2.0
- Cisco Nexus 5000: Version 5.1(3)N2(1)
- Cisco Catalyst 6500: Version 12.2.33-SXH8a

Contents

Notices

This information was developed for products and services offered in the U.S.A.

IBM may not offer the products, services, or features discussed in this document in other countries. Consult your local IBM representative for information on the products and services currently available in your area. Any reference to an IBM product, program, or service is not intended to state or imply that only that IBM product, program, or service may be used. Any functionally equivalent product, program, or service that does not infringe any IBM intellectual property right may be used instead. However, it is the user's responsibility to evaluate and verify the operation of any non-IBM product, program, or service.

IBM may have patents or pending patent applications covering subject matter described in this document. The furnishing of this document does not grant you any license to these patents. You can send license inquiries, in writing, to:
IBM Director of Licensing, IBM Corporation, North Castle Drive, Armonk, NY 10504-1785 U.S.A.

The following paragraph does not apply to the United Kingdom or any other country where such provisions are inconsistent with local law: INTERNATIONAL BUSINESS MACHINES CORPORATION PROVIDES THIS PUBLICATION “AS IS” WITHOUT WARRANTY OF ANY KIND, EITHER EXPRESS OR IMPLIED, INCLUDING, BUT NOT LIMITED TO, THE IMPLIED WARRANTIES OF NON-INFRINGEMENT, MERCHANTABILITY OR FITNESS FOR A PARTICULAR PURPOSE. Some states do not allow disclaimer of express or implied warranties in certain transactions, therefore, this statement may not apply to you.

This information could include technical inaccuracies or typographical errors. Changes are periodically made to the information herein; these changes will be incorporated in new editions of the publication. IBM may make improvements and/or changes in the product(s) and/or the program(s) described in this publication at any time without notice.

Any references in this information to non-IBM websites are provided for convenience only and do not in any manner serve as an endorsement of those websites. The materials at those websites are not part of the materials for this IBM product and use of those websites is at your own risk.

IBM may use or distribute any of the information you supply in any way it believes appropriate without incurring any obligation to you.

Any performance data contained herein was determined in a controlled environment. Therefore, the results obtained in other operating environments may vary significantly. Some measurements may have been made on development-level systems and there is no guarantee that these measurements will be the same on generally available systems. Furthermore, some measurements may have been estimated through extrapolation. Actual results may vary. Users of this document should verify the applicable data for their specific environment.

Information concerning non-IBM products was obtained from the suppliers of those products, their published announcements or other publicly available sources. IBM has not tested those products and cannot confirm the accuracy of performance, compatibility or any other claims related to non-IBM products. Questions on the capabilities of non-IBM products should be addressed to the suppliers of those products.

This information contains examples of data and reports used in daily business operations. To illustrate them as completely as possible, the examples include the names of individuals, companies, brands, and products. All of these names are fictitious and any similarity to the names and addresses used by an actual business enterprise is entirely coincidental.

COPYRIGHT LICENSE:

This information contains sample application programs in source language, which illustrate programming techniques on various operating platforms. You may copy, modify, and distribute these sample programs in any form without payment to IBM, for the purposes of developing, using, marketing or distributing application programs conforming to the application programming interface for the operating platform for which the sample programs are written. These examples have not been thoroughly tested under all conditions. IBM, therefore, cannot guarantee or imply reliability, serviceability, or function of these programs.

Trademarks

Foreword

This IBM® Redpaper™ publication was initiated and authored by members of the Technical Expert Council, Central Region (TEC CR) workgroup “Workload optimized networks” that was founded November 2011. When IBM moved back into the networking market with the acquisition of BNT, this move positioned IBM to capture a significant share of an emerging market for converged fabrics.

The initial idea of the workgroup was that Ethernet will become pervasive for all aspects of networking and storage in the next couple of years, which requires users to rethink how connectivity aspects become an integrated part of any computing solution. The workgroup established an expert community to bring development expertise, networking background, and customer and market insights together. Business sponsor of the TEC workgroup is Erich Baier, IBM Vice President, who is responsible for Modular Systems and Networking Development.

The TEC CR is the local affiliate for Germany, Switzerland, and Austria of the IBM Academy of Technology (AoT). The mission of the TEC CR is to strengthen the technical leadership in the local markets through promoting communication among experts and by consulting the executive management of IBM. It identifies and pursues technical opportunities that are relevant to the business of IBM, and aims to advance the technology base of IBM and its application in market-leading products, solutions, and services.

A major finding from the collaboration in the workgroup was that with the announcement of IBM PureSystems, many clients will have to integrate IBM Flex System into a typical Cisco dominated customer network. However, the documentation that is needed to complete this integration was not readily available. In close collaboration with the development labs, the group took initiative to close the gap and wrote this paper.

This paper is a good example of a collaborative effort of technical experts and leaders from different organizations that results in a holistic view of the relevant steps that are needed to make a solution successful in the market. As a chairman of the TEC CR, I would like to thank the authors of the paper for this initiative.

Thomas Harrer
Chairman, Technical Expert Council, Central Region (TEC CR)
Member IBM Academy of Technology

Preface

This IBM® Redpaper™ publication provides information about how to integrate an IBM Flex System into an existing customer network. It focuses on interoperability and seamless integration from the network perspective.

The paper describes the complete configuration of the most common scenarios. It guides you through several setups, and shows in detail how to configure the network switches and verify the functionality and proper operation.

This paper can help you to easily configure and monitor your Layer 2 setup. Typical, well-established Layer 2 Network setups use combinations of Spanning Tree Protocol, VLANs, and link aggregation.

The scenarios that are described in this paper include the use of the following switching products:

- Cisco Nexus 5000 (including vPC)
- Cisco Catalyst 6500
- IBM RackSwitch (including VLAG)
- IBM Flex System Ethernet Scalable Switch (including VLAG)

We describe the use of these switches with each of the following Spanning Tree Protocol (STP) configurations:

- RSTP (Rapid STP)
- MSTP (Multiple STP)
- PVRST (Per VLAN Rapid STP)
- STP disabled

The paper is for network administrators who are familiar with Cisco network products. It uses the industry standard command-line interface (isCLI) as the management interface. It is assumed that the reader is familiar with Cisco products and the use of isCLI.

The team who wrote this paper

This paper was produced by a team of specialists from around the world.

Christoph Raisch is a Senior Technical Staff Member at IBM Germany Research & Development, Boeblingen. He has 15 years of experience in defining and implementing firmware architectures in the areas of Fibre Channel, InfiniBand, PCI Express, Ethernet, and FCoE for different IBM platforms. He received a Dipl.-Ing. degree in Electrical Engineering from the University of Stuttgart. He works on future technologies for IBM networking switches.

Bernd Albrecht is an IT Specialist in IBM Germany specializing in IBM PureSystems and Storage. He has 21 years of experience in technical sales, starting with MVS, then eight years with AIX. For the past 12 years, he has worked in the storage and SAN product areas. He holds a degree as Graduate Engineer in Computer Science from the University of Dresden. He has co-authored eight IBM Redbooks publications. His current focus is working in the open storage area, storage virtualization, SAN, and PureSystems.

Peter Demharter is an IBM certified Senior Architect IT Infrastructure and Cisco Certified Internetwork Expert in Germany. He has over 20 years of experience in the data center and networking area and has worked for large companies, such as Daimler-Benz and Vodafone. He holds a degree in Administration and Information Science from the University of Constance. He has worked for IBM GTS for 10 years and has served as lead Architect in IBM projects such as ABB worldwide WAN migration from Equant to AT&T, and Deutschland Online Infrastructure, one of the first corporate IPv4/IPv6 dual stack wide area networks in Germany. He works for the IBM Research and Development Global Design Center in Boeblingen and focuses on IPv6, DC Networking, and Cloud Computing.

Stephan Fleck is a System Network Architect for IBM Systems & Technology Group, Europe. He has 19 years experience in the IT industry. His areas of expertise include network architecture assessments and network designs for data centers, and implementation proposals for network virtualization and network convergence solutions. Stephan also conducts training sessions for technical and sales personnel and he speaks regularly at technical conferences. He has worked as Network Security Lead Architect for the IBM Global Account and as support specialist for the European Network Support Back Office. Stephan is a Cisco Certified Internetwork Expert and holds a degree in electrical engineering from the Technical University Darmstadt, Germany.

Joachim Gross is an IT Architect and expert for network infrastructure in Germany. He has 20 years of experience in the networking area field as a Cisco Certified Internetwork Expert since 1995. He holds a degree in Information Technology from the FH in Esslingen, Germany. Working for IBM GTS for over 10 years, he has participated in worldwide networking and Voice over IP projects. His areas of expertise include data center networking and Voice over IP.

Ruediger Rissmann holds a Diploma Degree in Physics from the University of Heidelberg, Germany, and joined the IBM Zurich Research Laboratory in 1999. In his position as a network specialist, he has been involved in several pilot projects that explore new and emerging network technologies and has filed a number of patents. He leads the worldwide IPv6 deployment within the IBM Research Division. In March 2011, Ruediger became a research staff member and senior architect in the Services Innovation Lab. He holds the following certifications: IBM Certified IT Architect, Open Group Master Certified IT Architect, CCNP, CISSP, and GCFA.

Werner Sponer is a Senior IT Architect and expert for network infrastructure and security. He is responsible for network infrastructure and System Networking products in the System and Technology Group of IBM. He spent most of his 20-plus years at IBM growing the Global Services business through technical advancements. His assignments ranged from infrastructure to consulting and audit services, including projects and managed services. He brings over 18 years of IT experience in networking, data center, network architecture, local and wide area network, operation and support of IT infrastructure, in different customer industries and technologies. He evolves his leadership skills and customer orientation in different project scenarios in several countries, from consulting and planning, architecture, and design to operation and support. He is an engineer for electronic and biomedical technologies and IBM and Open Group Certified IT Architect.

Arwed Tschoeke is a Client Technical Architect in Hamburg, Germany. His focus areas are zEnterprise, virtualization solutions across IBM platforms, and Linux. He holds a degree in Physics from the University of Kaiserslautern, Germany.

Pietro Volante is a Certified IT Specialist for Networking Services. He has 20 years of experience in designing and implementing networks in many large client situations. He is certified as a Cisco Network and Design Professional (CCNP/CCDP) and has experience in designing data center networks and network performance analysis. In 2010, he worked on an assignment at STG to provide technical network support for the new BladeCenter network switches across north east Europe. He is responsible for projects in data center network integration and end-to-end network application performance analysis at key accounts.

Thanks to the following people for their contributions to this project:

- Erich Amrehn
- Bernhard Dierberger
- Oliver Raff
- Thomas Schwaller
- David Watts

Portions of this paper were based on the IBM Redbooks® publication, *Implementation of IBM j-type Ethernet Switches and Routers*, SG24-7882. Thanks to the authors of that paper.

Now you can become a published author, too!

Here's an opportunity to spotlight your skills, grow your career, and become a published author—all at the same time! Join an ITSO residency project and help write a book in your area of expertise, while honing your experience using leading-edge technologies. Your efforts will help to increase product acceptance and customer satisfaction, as you expand your network of technical contacts and relationships. Residencies run from two to six weeks in length, and you can participate either in person or as a remote resident working from your home base.

Find out more about the residency program, browse the residency index, and apply online at this website:

http://www.ibm.com/redbooks/residencies.html

Comments welcome

Your comments are important to us!

We want our papers to be as helpful as possible. Send us your comments about this paper or other IBM Redbooks publications in one of the following ways:

- Use the online **Contact us** review Redbooks form found at:

  http://www.ibm.com/redbooks

- Send your comments in an email to:

  redbooks@us.ibm.com

- Mail your comments to:

  IBM Corporation, International Technical Support Organization
  Dept. HYTD Mail Station P099
  2455 South Road
  Poughkeepsie, NY 12601-5400

Stay connected to IBM Redbooks

- Find us on Facebook:

  http://www.facebook.com/IBMRedbooks

- Follow us on Twitter:

  http://twitter.com/ibmredbooks

- Look for us on LinkedIn:

  http://www.linkedin.com/groups?home=&gid=2130806

- Explore new Redbooks publications, residencies, and workshops with the IBM Redbooks weekly newsletter:

  https://www.redbooks.ibm.com/Redbooks.nsf/subscribe?OpenForm

- Stay current on recent Redbooks publications with RSS Feeds:

  http://www.redbooks.ibm.com/rss.html

1

Introduction

With the release of PureSystems™, IBM launched a second hybrid computing platform to the market. zEnterprise® with zBX is focused on mainframe affine applications with a simplified workload-oriented management approach. PureSystems offers various implementation possibilities that are focused on a cloud-oriented customer strategy.

To deliver value, PureSystems consists of the following building blocks:

- Management

  The Flex System Manager simplifies and automates all management tasks. It also manages all physical and virtual resources within the solution. Hence, it offers a full integration and infrastructure-as-a-service-like management of PureSystems.

- Compute Nodes

  To select the system that fits best to your requirements, it is possible to mix Power Systems and System x® compute nodes within the PureSystems Chassis.

- Storage

  The Storwize V7000 storage controller delivers automatic EasyTierung of storage controller internal storage and the possibility to take advantage of external storage at the same time. With its built-in storage virtualization, simple and comprehensive management is possible via the integrated management of PureSystems.

- Networking

  PureSystems provide a choice of adapters and switches. All components are standard-based and integrated into the management of PureSystems. This variety provides a combination of features that fits into the existing infrastructure. The modular concept offers the possibility to adapt to future requirements.

To use the capabilities of PureSystems, in most cases a connection to an existing network is required. However, modern datacenters rely on a complex network infrastructure. The introduction of active networking components within an existing infrastructure can affect all components and poses a risk. Therefore, many customers are reluctant to introduce such solutions.

1.1 Networking

Many customers are currently migrating their networking infrastructure from 1 Gb Ethernet to 10 Gb Ethernet. This transformation exceeds the simple change of technology and requirements increased significantly. The complexity of modern application infrastructures requires networks of low latency at high bandwidth. Additionally, growing security awareness affects the design of a network and increases the complexity (for example, router, firewalls, filters). Because of virtualization and the adoption of cloud concepts, the physical network infrastructure merges with a logical and virtual networking environment that is represented by software components that are running on server systems.

As a result, there is no average network or general blueprint. Each network is unique because it depends on the customer's demands. Often, customers choose individual components from vendors that meet their requirements. From this decision, the following challenges arise:

- The administration of such mixed infrastructures is rather complex and often requires more management concepts.
- Testing and maintaining interoperability is elaborate and time-consuming.

To overcome these challenges, customers' adopt a single-vendor strategy. This strategy offers a simplification in the daily routine but can restrict the adoption of new solutions if they are not supported by the infrastructure vendor.

To support their customers, the industry defines standards. Based on those standards, interoperability between vendors can be achieved. This interoperability offers the opportunity to adapt the latest technology and limit the risk to the administration.

However, new standards are adopted by vendors at different times and not all choose to follow standards rigorously. Instead, they might provide their own extensions. One example of this issue is the integration of virtualized environments into the networking infrastructure. The networking branch of IBM is investing with other vendors a significant amount of energy to define global standards that support the mobility of virtual systems and infrastructures, such as vswitches. This effort delivers the availability of functions that allow a guest relocation between different systems that are independent of the hypervisor or the networking components within the physical infrastructure.

1.2 IBM PureSystems

The PureSystems platform is a new approach to deliver scalable hybrid systems for the adoption of modern cloud concepts. Its design delivers value to the customer by fulfilling the following requirements:

- Simplification to ease the implementation of complex solutions and operation
- Built in expertise to ease deployment and capacity planning
- Integration within the existing architectures and infrastructure

These advantages are achieved by a new hardware and system management concept. To reflect this concept, the systems are labeled *Expert Integrated Systems*. The following PureSystems offerings are available:

- PureFlex™ System: An infrastructure system that monitors capacity and performance to optimize the infrastructure (Infrastructure-as-a-Service within the cloud terminology).

- PureApplication System: A platform system that is based on a flexible infrastructure that provides the means of deploying and maintaining an application infrastructure that is based on patterns (Platform-as-a-Service within the cloud terminology).
- PureData System: Based on the PureApplication concept, this solution is focused on delivering data services by providing a fully managed, flexible, and highly available database platform that meets all demands.

The foundation of these Expert Integrated Systems is the PureSystems hardware, which consists out-of-server hardware (Power and x86), storage, and network, such as storage area network (SAN) and local area network (LAN). The design principle inherits the BladeCenter philosophy of IBM to open standards, manageability, serviceability, and an existing roadmap for investment protection.

To provide full flexibility, many active infrastructure components are available. The LAN components are derived from the networking technology of IBM, which ensures that an in-depth integration into virtual environments is possible. Because of the broad support of networking standards, this ability applies to physical networks as well.

For more information about IBM PureSystems, see *Overview of IBM PureSystems*, TIPS0892, which is available at this website:

http://www.redbooks.ibm.com/abstracts/tips0892.html

1.3 Switch configuration

IBM System Networking switches can be configured through multiple configuration interfaces. For this paper, the iSCLI method was chosen. Its syntax should be familiar to network administrators with experience in switches from other vendors.

Important: This Redpaper uses the show running-config configuration dumps to demonstrate how the switches were configured. These dumps include all of the command sequences that are required to configure the switch manually.

For more information, see the Configuration Dump section of the Configuration Commands chapter in *ISCLI–Industry Standard CLI Command Reference for the IBM Flex System Fabric EN4093 10Gb Scalable Switch*, which is available at this website:

http://publib.boulder.ibm.com/infocenter/flexsys/information/index.jsp?topic=%2Fcom.ibm.acc.networkdevices.doc%2FIo_module_compass.html

1.4 How to use this paper

We recommend that you read Chapter 2, “Layer 2 Network protocols and technologies” on page 5 first to clarify the use of technical terms. Then, based on the networking hardware you have, select the following appropriate chapter to read next:

- Chapter 3, “IBM RackSwitch G8264 connectivity” on page 15
- Chapter 4, “Cisco Nexus 5000 connectivity” on page 95
- Chapter 5, “Cisco Catalyst 6500 switch connectivity” on page 171

Within each of these chapters, you can review subsections that relate to the choice of Spanning Tree Protocol that you use.

Finally, Appendix A, “Troubleshooting” on page 177, describes different aspects of problem analysis and identifies information that is required for efficient troubleshooting.

2

Layer 2 Network protocols and technologies

Open systems interconnection (OSI) Layer 2 (or, the DataLink Layer) provides the functional means for data transfer between adjacent nodes in the network. Layer 2 also provides the lowest level of addressability in an Ethernet network that uses MAC addresses.

The MAC address contains 48 bits that are split into two, 24-bit sections. The first 24-bit section is assigned by IEEE to reflect the organizationally unique identifier (OUI)). Each Ethernet hardware manufacturer has one or more of these OUIs. The second 24-bit section is created by the manufacturer. The combination of these two 24-bit sections should guarantee that the MAC address is always unique in a LAN.

This chapter includes the following topics:

- Basic frame forwarding concepts
- Virtual local area network
- Spanning tree
- Link aggregation

2.1 Basic frame forwarding concepts

Each frame contains a source and a destination MAC address. A network bridge or switch, also called Layer 2 device, is responsible to transport the Ethernet frame that is based on the destination MAC address.

Figure 2-1 shows the simplified principle of frame forwarding.

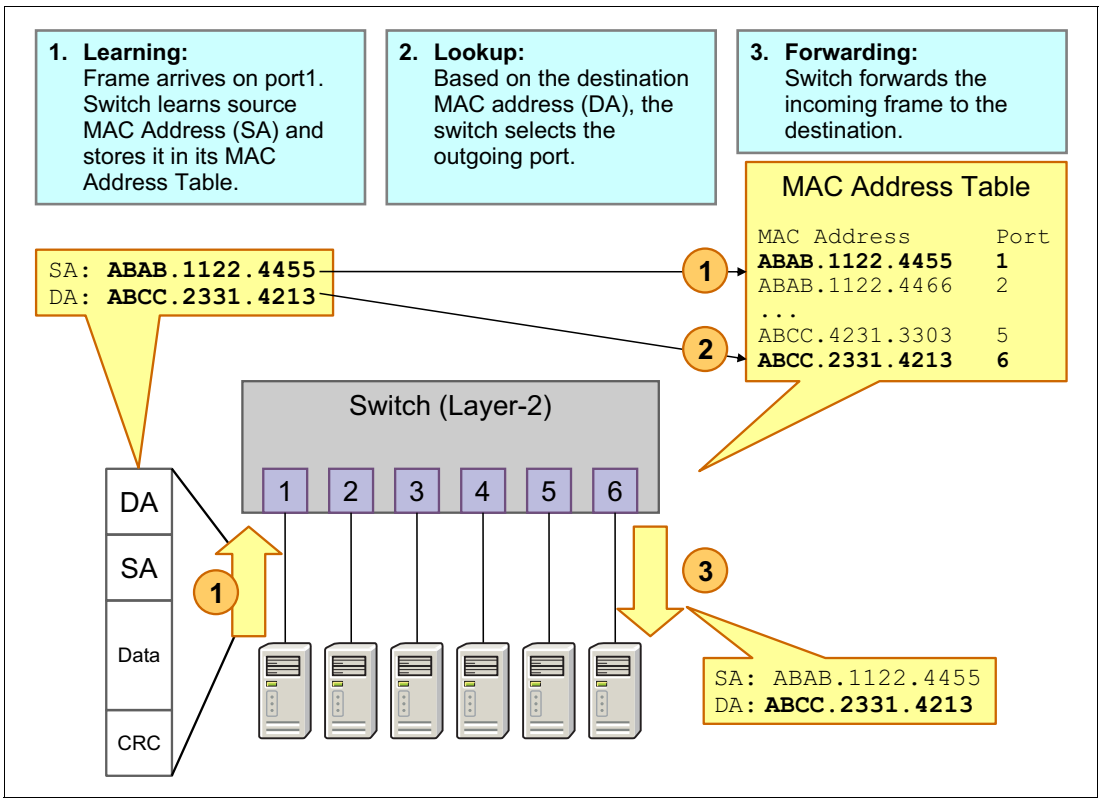

Figure 2-1 Simplified principle of frame forwarding

The forwarding of an incoming frame (on port 1 in this case) is divided into the following phases:

- Learning

  Ethernet Frame arrives on port1. Switch learns source MAC Address (SA) and stores this fact it in its MAC Address Table.

- Lookup

  Based on the destination MAC address (DA), the switch looks up the correct routing in its MAC address table and selects the outgoing port (port 6).

- Forwarding

  The switch forwards the Ethernet frame to the destination MAC address via port 6.

If the switch does not know the destination address, it forwards the packet on all ports except the port from which it was received.

During this forwarding process, the frame header persists unmodified.

2.2 Virtual local area network

A virtual local area network (VLAN) is a networking concept in which a network is logically divided into smaller virtual LANs. The Layer 2 traffic in one VLAN is logically isolated from other VLANs, as shown in Figure 2-2.

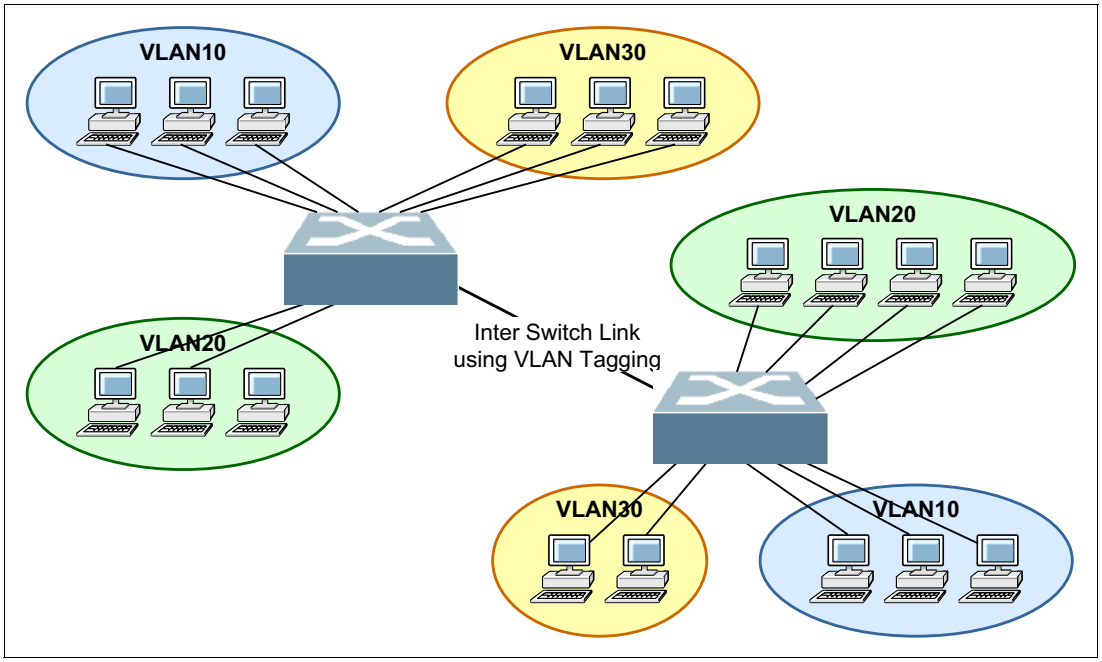

Figure 2-2 Isolation at Layer 2

The simplest way to keep the isolated VLANs separately on an inter-switch link is to use one physical link for each VLAN, as shown in Figure 2-3.

However, this method does not scale well because it uses many ports in networks with multiple VLANs and multiple switches. Also, this method does not use link capacity efficiently when traffic in the LANs is not uniform.

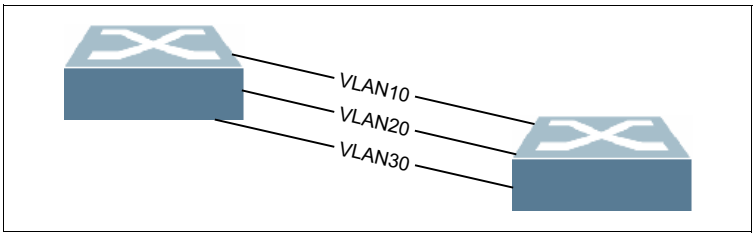

Figure 2-3 Inter-switch link: one link for each VLAN

The second method is VLAN tagging over a single link in which each frame in tagged with its VLAN ID (see Figure 2-4 on page 8). This method is highly scalable because only a single link is required to provide connectivity to many VLANs. This configuration provides for better utilization of the link capacity when VLAN traffic is not uniform.

The protocol for VLAN tagging of frames in a LAN environment is defined by the IEEE 802.1 P/Q standard.

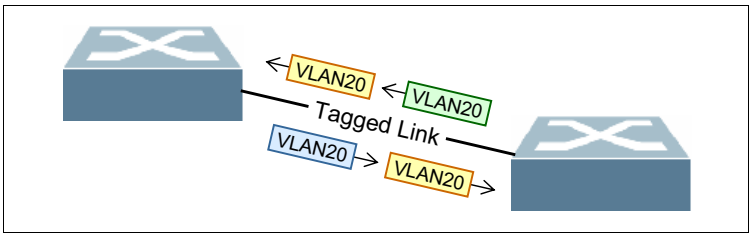

Figure 2-4 Inter-switch link that uses VLAN tagging

2.3 Spanning tree

Because of the history of LANs and Ethernet, there are some shortcomings in the protocol. In particular, Ethernet was not designed to use frame forwarding. Therefore, the frame format does not include a hop count field, or time-to-live (TTL), which would allow for a looping packet to be detected and discarded. Packets that are sent in a loop between multiple switches are forwarded without reaching their destination, which can cause significant load.

The simplest approach to prevent looping packets is to create a network topology in which frames with a certain target can take only one path on each individual switch element. For Ethernet, the tree topology was chosen, which is the simplest topology that guarantees this requirement. Bridges and switches were enhanced to support a topology configuration protocol called *Spanning Tree Protocol* (STP).

STP provides Layer 2 loop prevention by deactivating redundant routes between network elements. This configuration has been further enhanced and is now used in the following forms:

- STP
- Rapid STP (RSTP)
- Multiple STP (MSTP)
- Per VLAN STP or Per VLAN Rapid STP (PVRST)

STP was the initial implementation of Spanning-Tree Protocol, which was invented 1985 and published 1990 in the IEEE as 802.1D.

Rapid Spanning Tree (RSTP) became standard in IEEE in 2001 as 802.1w. It provides faster convergence times than STP.

Multiple Spanning Tree (MSTP) was first defined in IEEE as 802.1s and later merged into 802.1Q-2005 as an extension to RSTP. It uses more than one Spanning Tree process to distribute the VLANs into different STP topologies.

Cisco provides a proprietary version of VLAN-based STP. For each VLAN, it uses a separate Spanning Tree. Even if it is not an IEEE standard, many network vendors allow compatible setup to interoperate with Cisco's STP.

2.3.1 Spanning Tree Protocol: IEEE 802.1D

STP uses Bridge Protocol Data Unit (BPDU) packets to exchange information with other switches. BPDUs send out hello packets at regular intervals to exchange information across bridges and detect loops in a network topology.

The following types of BPDUs are available:

- Configuration BPDU

  These BPDUs contain configuration information about the transmitting switch and its ports, including switch and port MAC addresses, switch priority, port priority, and port cost.

- Topology Change Notification (TCN) BPDU

  When a bridge must signal a topology change, it starts to send TCNs on its root port. The designated bridge receives the TCN, acknowledges it, and generates another TCN for its own root port. The process continues until the TCN reaches the root bridge.

- Topology Change Notification Acknowledgement (TCA) BPDU

  These frames are sent by the root bridge to acknowledge the receipt of a TCN BPDU.

STP uses the information that is provided by the BPDUs to elect a root bridge, identify root ports for each switch, identify designated ports for each physical LAN segment, and prune specific redundant links to create a loop-free tree topology. All leaf devices calculate the best path to the root device and place their ports in blocking or forwarding states that are based on the best path to the root. The resulting tree topology provides a single active Layer 2 data path between any two end stations.

Figure 2-5 shows a switch topology with five interconnected switches. To avoid Layer 2-looped frames, Spanning Tree blocks all ports that include an indirect, redundant path to the root bridge. As shown in Figure 2-5, the resulting logical switch topology is based on the STP calculation.

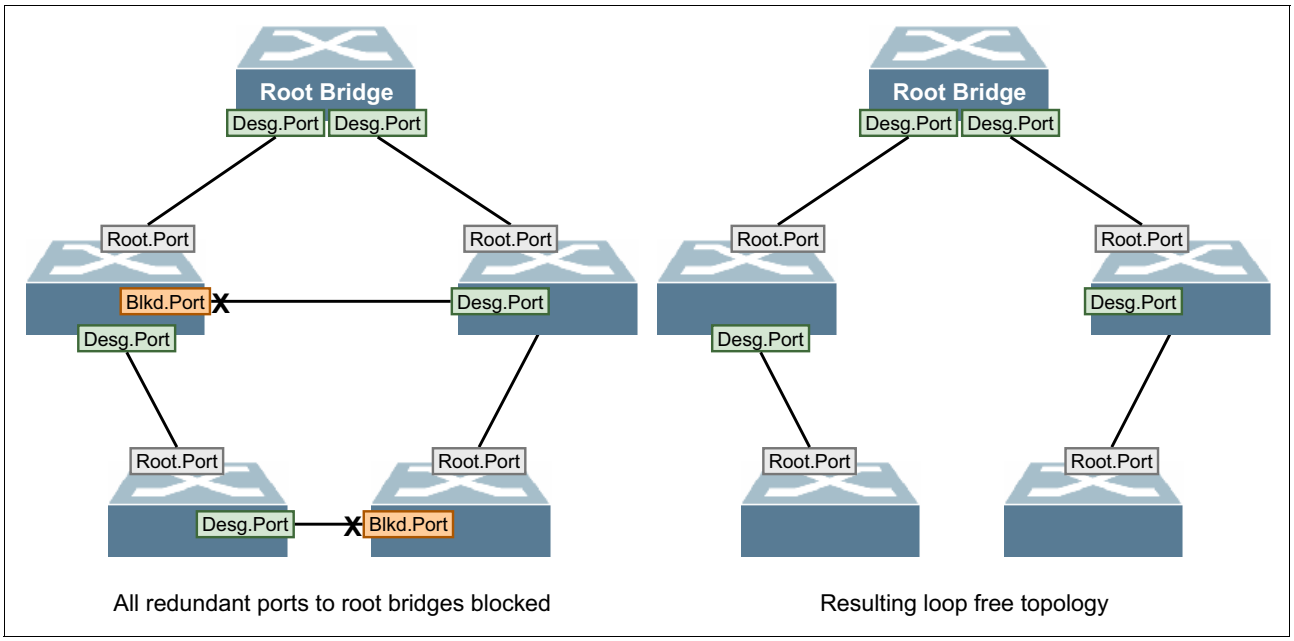

Figure 2-5 Switch topology with five interconnected switches

The root bridge election is an important point in a network design. To avoid suboptimal Layer 2 paths, it is always necessary to manually adjust the bridge priority on each switch in a Layer 2 network.

2.3.2 Rapid Spanning Tree Protocol: IEEE 802.1w

Rapid Spanning Tree Protocol (RSTP) provides better reconvergence time than the original STP. RSTP identifies certain links as point-to-point. When a point-to-point link fails, the alternative link can make the transition to the forwarding state.

An RSTP domain includes the following components:

- Root port: The “best path” to the root device.
- Designated port: Indicates that the switch is the designated bridge for the other switch that connects to this port.
- Alternative port: Provides an alternative root port.
- Backup port: Provides a designated alternative port. This configuration is used if there is more than one link that is connected to the same switch without link aggregation.

RSTP uses the following port states by using the show spanning tree command:

- Discarding: Like the blocking-state in STP, this port does not forward traffic to avoid loops.
- Learning: The port builds its MAC address table but does not forward traffic.
- Forwarding: The port forwards traffic.

The RSTP reconvergence time often is less than 1 second. The standard STP (802.1d) requires 30 seconds or more.

RSTP was originally defined in the IEEE 802.1w draft specification and later incorporated into the IEEE 802.1D-2004 specification.

2.3.3 Multi-instance Spanning Tree Protocol: IEEE 802.1s

Although RSTP provides faster convergence time than STP, it does not solve a problem inherent in STP. All VLANs within a LAN must share the same spanning tree while many links in the network could be unused. To solve this problem, the existing STP concepts are no longer applied to physical ports. The concepts are applied to the connectivity of multiple individual groups of VLANs, called *spanning tree regions*, instead.

In a Multi-instance Spanning Tree Protocol (MSTP) region, a group of bridges can be modeled as a single bridge. An MSTP region contains multiple spanning tree instances (MSTIs). MSTIs provide different paths for different VLANs. This functionality facilitates better load sharing across redundant links.

An MSTP region can support up to 64 MSTIs, and each instance can support 1 - 4094 VLANs.

MSTP was originally defined in the IEEE 802.1s draft specification and later incorporated into the IEEE 802.1Q-2003 specification.

2.3.4 Per VLAN Rapid Spanning Tree

Per VLAN Rapid Spanning Tree (PVRST) is a nonstandard spanning tree extension that is based on RSTP that was introduced by Cisco Systems. In PVRST mode, each VLAN is assigned to its own spanning-tree group. A maximum of 127 spanning tree groups are allowed in IBM System Networking switches.

PVRST use 802.1Q tagged frames to differentiate STP BPDUs for each VLAN. The IIBM System Networking implementation of PVRST is fully compatible with Cisco RSTP/PVRST+ protocol.

2.4 Link aggregation

A link aggregation group (LAG) combines physical links to operate as a single, larger logical link. The member links no longer function as independent physical connections, but as members of the larger logical link, as shown in Figure 2-6.

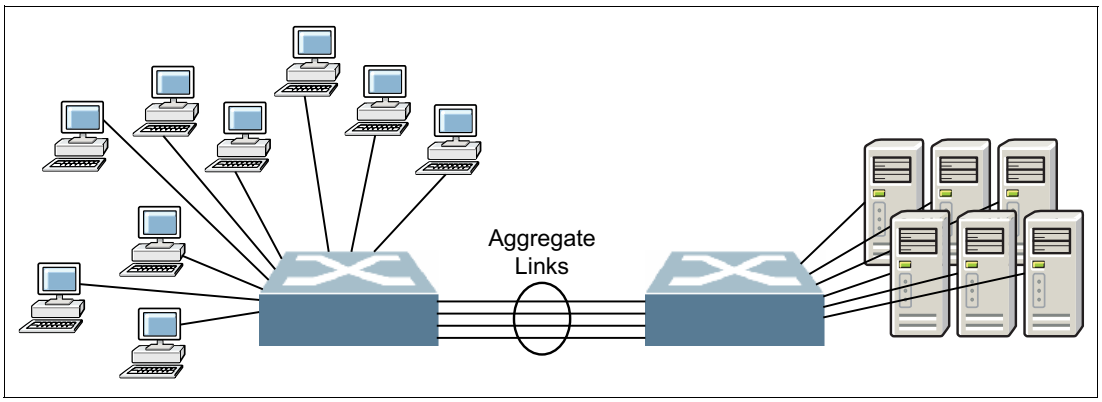

Figure 2-6 Link aggregation

Link aggregation provides greater bandwidth between the devices at each end of the aggregated link. Another advantage of link aggregation is increased availability because the aggregated link is composed of multiple member links. If one member link fails, the aggregated link continues to carry traffic over the remaining member links.

Each of the devices that are interconnected by the aggregated link uses a hashing algorithm to determine on which of the member links frames will be transmitted. The hashing algorithm might use varying information in the frame to decide. This algorithm might include a source MAC, destination MAC, source IP, destination IP, and more. It might also include a combination of these values.

Link aggregation can be defined as static or by using a dynamic negotiation protocol, such as Link Aggregation Control Protocol (LACP). Aggregated links often are referred to as *Ether-Channels* or *Trunk-Links*.

Aggregated links appear to the STP as single logical links. Therefore, STP does not enable or disable individual physical links of an aggregated link.

2.4.1 Link Aggregation Control Protocol

LACP (also known as 802.3ad and, more recently, 802.1AX-2008) is a vendor-independent standard for dynamically building aggregated links between switches. On an LACP-defined link, the switches are sending LACP Data Units (LACPDU) to share information about the current state of the aggregated link. Compared to static LAG, LACP provides better failure detection and, therefore, a higher redundancy.

2.4.2 Virtual Link Aggregation Groups

Virtual Link Aggregation Groups (VLAGs) is an extension to link aggregation to allow more redundancy. For a standard LAG (static or dynamic), all ports that build an aggregated link must be on the same switch. VLAG allows two switches to pair as a single virtual entity to build an aggregated link that is distributed to both switches. From the perspective of the target device, the ports that are connected to the VLAG peers appear to be a single trunk that is connected to a single logical device.

The VLAG-capable switches synchronize their logical view of the access layer port structure and internally prevent implicit loops. The VLAG topology also responds more quickly to link failure and does not result in unnecessary MAC flooding.

As shown in Figure 2-7, VLAG helps to avoid blocked ports by STP and allows higher performance and full redundancy.

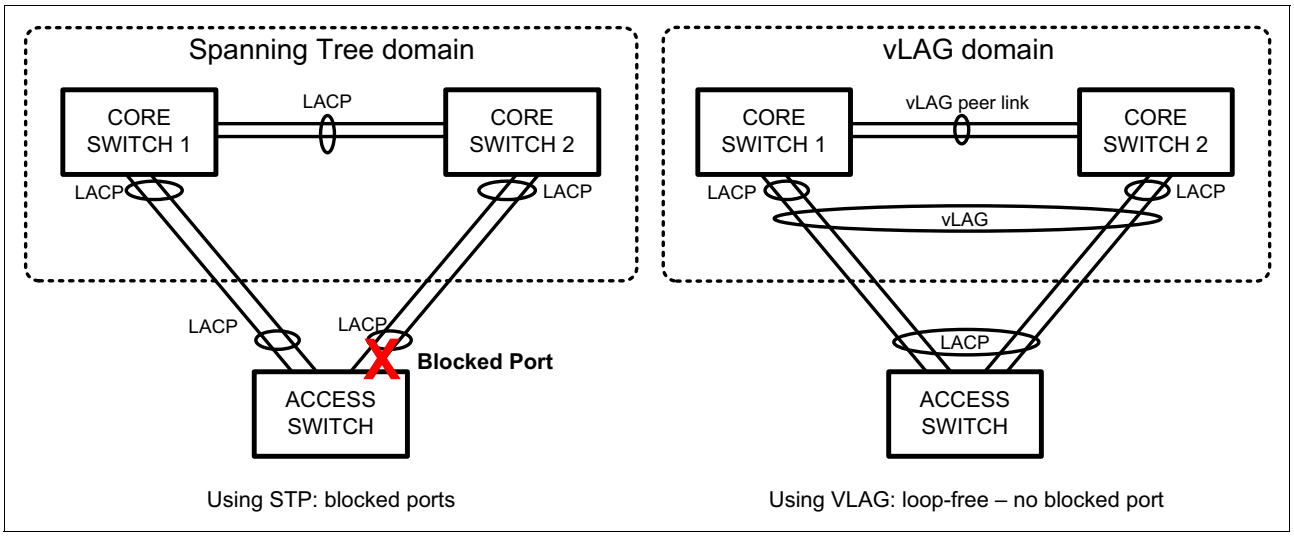

Figure 2-7 Comparing STP with blocked ports versus VLAG loop-free topology

Important: The protocol for VLAG peer links is not standardized, so the switches in a pair of switches must belong to the same product family.

2.4.3 Cisco Virtual Port Channel

On the Nexus platform, Cisco implemented the VLAG concept as a version of a Multichassis EtherChannel (MEC), called the *Virtual Port Channel* (vPC), as shown in Figure 2-8. The vPC combines the advantages of hardware redundancy and the loop management of an aggregated link. The pair of switches that is building the vPC appear to any Portchannel-attached device as a single switch from Layer 2 perspective, while they are still operating as two independent devices with independent switch control and management.

If a vPC is used, the STP is not needed to manage the loops. Therefore, it could be disabled on these links and all disadvantages of the STP could be eliminated. The biggest advantage of this configuration is the usability of all bandwidth of the installed links and the fast handling of link failures within the vPC.

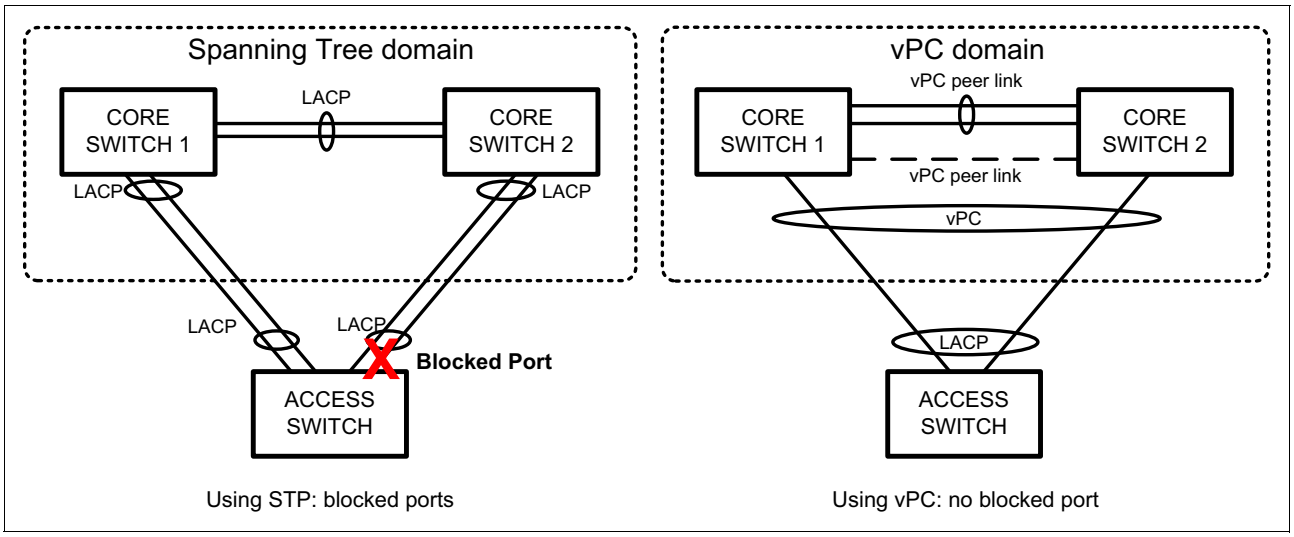

Figure 2-8 Schematic drawing of vPC

The pair of switches that is building the vPC is seen as a single switch from the device that is connected to the Port channel. This device can be a server, a switch, or any other network device.

2.4.4 Link Layer Discovery Protocol: 802.1AB

The Link Layer Discovery Protocol (LLDP) is a vendor-neutral link-layer protocol that is used by network devices to enable standardized discovery of network nodes.

LLDP performs functions similar to several proprietary protocols, such as the Cisco Discovery Protocol (CDP).

3

IBM RackSwitch G8264 connectivity

In this chapter, various network configuration scenarios for a PureSystem that is connected to an IBM Rack Switch infrastructure are described.

Configuration tests have been done for commonly used network technologies, VLAN trunking (IEEE 802.1Q), static and dynamic link aggregation (LACP), Spanning Tree (PVRST, MSTP), and network virtualization with VLAG (virtual Link Aggregation).

Link Layer Discovery Protocol (LLDP) as vendor independent protocol is used to verify Layer 2 topology.

In this chapter, we show the configuration dumps of the network devices and the commands that are used to verify the proper operation of the switches. We explain the configurations with use cases that show examples of how to configure the devices for this setup.

This chapter includes the following topics:

- Prerequisites
- Use Case 1: PVRST
- Use Case 2: Link aggregation and PVRST
- Use Case 3: Link aggregation and MST
- Use Case 4: Link aggregation, MSTP and VLAG
- Use Case 5: Link aggregation and VLAG without STP

3.1 Prerequisites

We started by physically connecting a triangle with two IBM RackSwitch™ G8264 switches and one IBM Flex System™ EN2092 1 Gb switch. We configured four VLANs and set up Per VLAN Rapid Spanning Tree (PVSTP). To test connectivity, we used a test PC.

We used the following switches and one PC to test connectivity:

- Two IBM RackSwitch G8264 switches
- One IBM Flex System EN2092 1 Gb Ethernet Scalable Switch
- One test PC

The links between the switches always are 10 Gigabit Ethernet.

3.2 Use Case 1: PVRST

In Use Case 1, we have a pair of IBM RackSwitch G8264 switches connected to Flex System EN2092 1-Gb Ethernet Scalable Switch with PVRST.

In this use case, we used three 10 GE links to connect the switches. We also configured 802.1q trunks and PVRST. For load balancing, odd VLANs 10 and 30 and even VLANs 20 and 40 are used, as shown in Figure 3-1 (odd VLANs) and Figure 3-2 on page 17 (even VLANs)

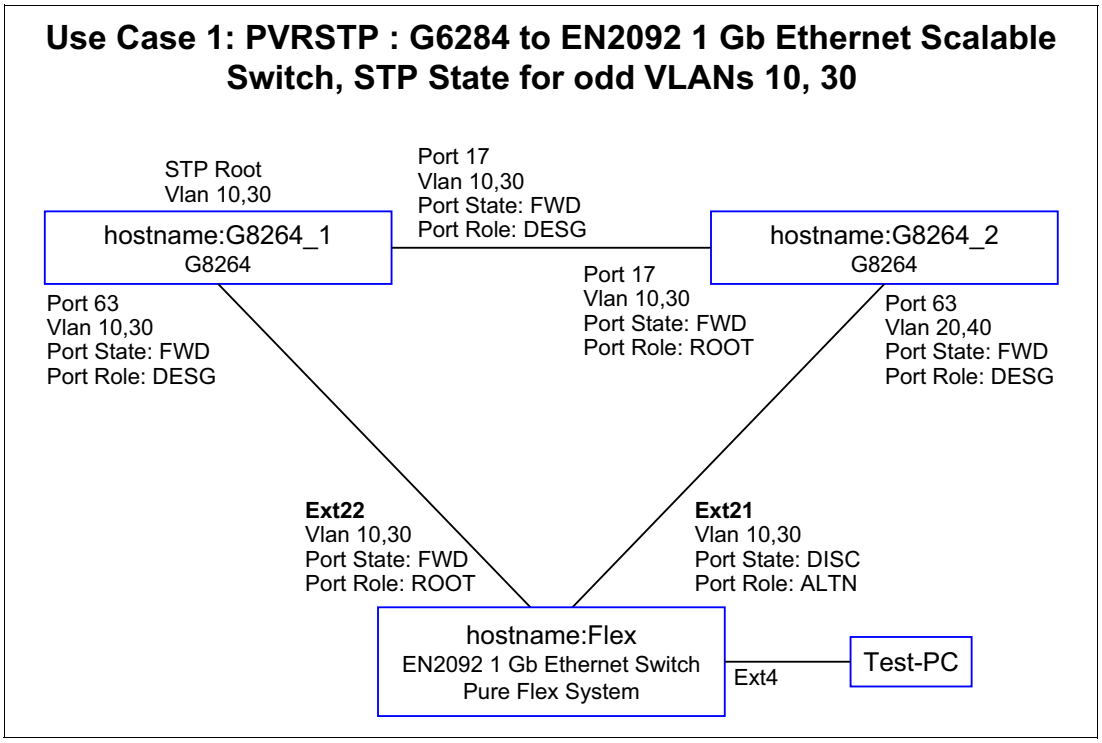

Figure 3-1 Use Case 1: PVRST: Odd-numbered VLANs

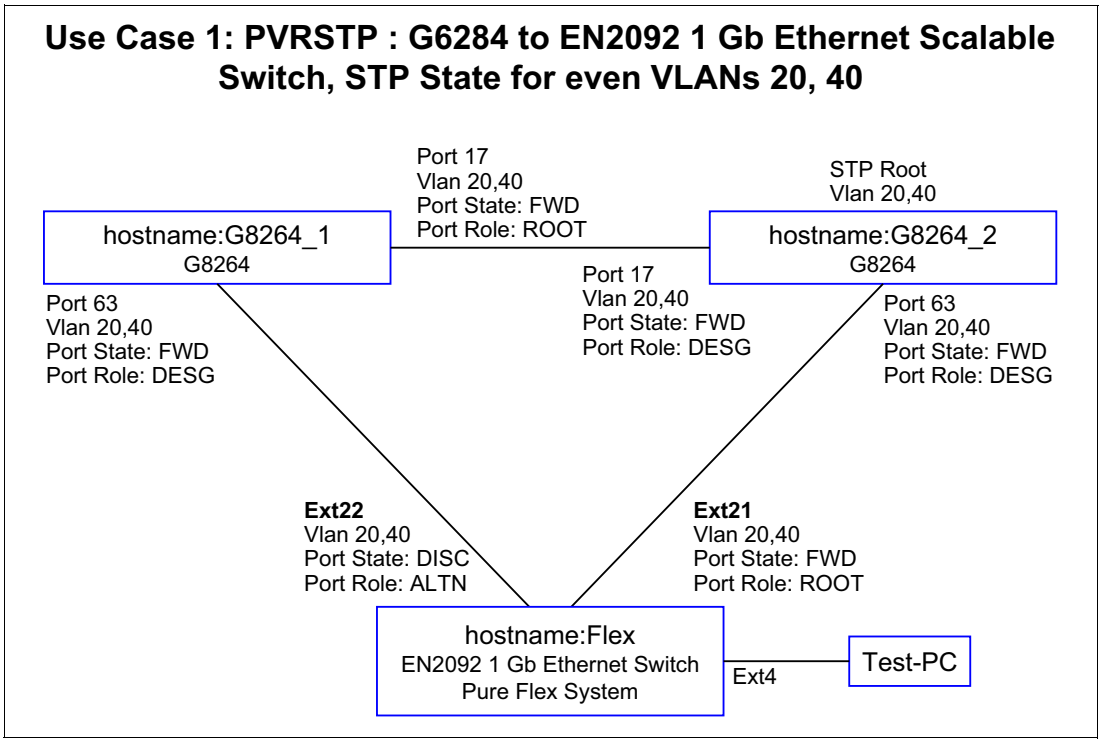

Figure 3-2 Use Case 1: PVRST: Even-numbered VLANs

3.2.1 Verifying the topology by using lldp

To verify the topology, we used the **lldp remote-device** command on the three switches, as shown in Example 3-1. Important parameters and details are highlighted in red.

Example 3-1 Checking the topology use show lldp remote-device

```
Flex#sh lldp remote-device
LLDP Remote Devices Information

LocalPort | Index | Remote Chassis ID         | Remote Port          | Remote System Name
----------|-------|--------------------------|----------------------|-------------------
EXT22     | 1     | 08 17 f4 32 bb 00        | 63                   | G8264_1
EXT21     | 2     | fc cf 62 9d 67 00        | 63                   | G8264_2
INTA1     | 3     | 5c f3 fc 5f 43 9d        | 5c-f3-fc-5f-43-9d    |
EXT5      | 6     | 00 0d ec a3 8f 81        | mgmt0                | vie
EXT7      | 7     | 00 05 9b 7b 84 01        | mgmt0                | str


!--- Display the LLDP remote devices.
!--- The local Port Numbers of the Pure Flex System Ethernet Switch
!--- distinguish between internal and external Ethernet ports.
!--- The EXT4 port connecting to the Test PC is not shown as this device does not support
LLDP .


G8264_1#show lldp remote-device
LLDP Remote Devices Information

LocalPort | Index | Remote Chassis ID         | Remote Port          | Remote System Name
----------|-------|--------------------------|----------------------|-------------------
17        | 1     | fc cf 62 9d 67 00        | 17                   | G8264_2
63        | 2     | 08 17 f4 76 78 00        | 50                   | Flex

!--- The port EXT22 of the Flex switch is mapped to remote port number 50.

G8264_2#show lldp remote-device
LLDP Remote Devices Information

LocalPort | Index | Remote Chassis ID         | Remote Port          | Remote System Name
----------|-------|--------------------------|----------------------|-------------------
17        | 1     | 08 17 f4 32 bb 00        | 17                   | G8264_1
63        | 2     | 08 17 f4 76 78 00        | 49                   | Flex

!--- The port EXT21 of the Flex switch is mapped to remote port number 49.
```

3.2.2 Verifying trunks

To verify which VLANs are active on which trunk, we used the **show interface trunk** command on the switches, as shown in Example 3-2. Important parameters and details are highlighted in red.

Example 3-2 Output from the show interface trunk command

```
Flex#show interface trunk
Alias   Port Tag RMON Lrn Fld PVID       NAME                  VLAN(s)
------- ---- --- ---- --- --- ----- -------------- -------------------------------
...
EXT4    32    y   d    e   e     1  TEST_PC        1 10 20 30 40
...
EXT21   49    y   d    e   e    10  TO_G8264_2_Port63 10 20 30 40
EXT22   50    y   d    e   e    10  TO_G8264_1_Port63 10 20 30 40
EXT23   51    y   d    e   e    10  TO_G8264_1_Port64 10 20 30 40
EXT24   52    y   d    e   e    10  TO_G8264_2_Port64 10 20 30 40

* = PVID is tagged.

G8264_2#sh int trunk
Alias   Port Tag RMON Lrn Fld PVID       NAME                  VLAN(s)
------- ---- --- ---- --- --- ----- -------------- -------------------------------
17      17    y   d    e   e    10  CrossLink      10 20 30 40
18      18    y   d    e   e    10  CrossLink      10 20 30 40
63      63    y   d    e   e    10  UPLINK_TO_FLEX 10 20 30 40
64      64    y   d    e   e    10  UPLINK_TO_FLEX 10 20 30 40

* = PVID is tagged.
```

3.2.3 Verifying PVRST spanning tree configurations

We verified the PVRST spanning tree configuration of the switches by executing the **show spanning-tree** command, which produced the following outputs. Important parameters and details are highlighted in red:

- EN2029: Example 3-3 on page 20
- G8264 switch 1: Example 3-4 on page 22
- G8264 switch 2: Example 3-5 on page 24

As shown in Figure 3-1 on page 16, we have two spanning trees, one for even-numbered VLANs and one for odd-numbered VLANs. By using the **show spanning-tree** command, you can verify the status of the respective Ethernet interface's VLAN, port state, and port role.

Example 3-3 Verifying the PVRST spanning tree configuration: EN2092 switch

```
Flex#sh spanning-tree
-----------------------------------------------------------------
Pvst+ compatibility mode enabled

-----------------------------------------------------------------
Spanning Tree Group 1: On (PVRST)
VLANs:  1

Current Root:            Path-Cost  Port Hello MaxAge FwdDel
 8000 00:16:ca:a1:c1:00    20000    EXT3    2     20     15

Parameters:  Priority  Hello  MaxAge  FwdDel  Aging   Topology Change Counts
              61441      2      20      15     300                  3

    Port      Prio    Cost    State  Role Designated Bridge      Des Port    Type
------------- ---- ---------- -----  ---- ---------------------- -------- ----------
INTA1            0         0   FWD *
INTA2            0         0   FWD *
INTA4            0         0   FWD *
EXT1           128     20000!  FWD   DESG f001-08:17:f4:76:78:00     801d        P2P
EXT2           128     20000!  FWD   DESG f001-08:17:f4:76:78:00     801e        P2P
EXT3           128     20000!  FWD   ROOT 8000-00:16:ca:a1:c1:00     8011        P2P
EXT4           128     20000!  FWD   DESG f001-08:17:f4:76:78:00     8020        P2P
EXT5           128     20000!  FWD   DESG f001-08:17:f4:76:78:00     8021        P2P
EXT7           128     20000!  FWD   DESG f001-08:17:f4:76:78:00     8023        P2P
* = STP turned off for this port.
! = Automatic path cost.

-----------------------------------------------------------------
Spanning Tree Group 10: On (PVRST)
VLANs:  10

Current Root:            Path-Cost  Port Hello MaxAge FwdDel
 600a 08:17:f4:32:bb:00     2000   EXT22    2     20     15

!--- Compare the ID of the Root with the LLDP output to identify the root switch.


Parameters:  Priority  Hello  MaxAge  FwdDel  Aging   Topology Change Counts
              61450      2      20      15     300                  4

    Port      Prio    Cost    State  Role Designated Bridge      Des Port    Type
------------- ---- ---------- -----  ---- ---------------------- -------- ----------
EXT4           128     20000!  FWD   DESG f00a-08:17:f4:76:78:00     8020        P2P
EXT21          128      2000!  DISC  ALTN 700a-fc:cf:62:9d:67:00     803f     Shared
EXT22          128      2000!  FWD   ROOT 600a-08:17:f4:32:bb:00     803f     Shared
! = Automatic path cost.

-----------------------------------------------------------------
Spanning Tree Group 20: On (PVRST)
VLANs:  20

Current Root:            Path-Cost  Port Hello MaxAge FwdDel
 6014 fc:cf:62:9d:67:00     2000   EXT21    2     20     15

Parameters:  Priority  Hello  MaxAge  FwdDel  Aging   Topology Change Counts
              61460      2      20      15     300                  3

    Port      Prio    Cost    State  Role Designated Bridge      Des Port    Type
```

```
------------- ---- ---------- -----  ---- ---------------------- -------- ----------
EXT4           128     20000!  FWD   DESG f014-08:17:f4:76:78:00     8020        P2P
EXT21          128      2000!  FWD   ROOT 6014-fc:cf:62:9d:67:00     803f     Shared
EXT22          128      2000!  DISC  ALTN 7014-08:17:f4:32:bb:00     803f     Shared
! = Automatic path cost.

-----------------------------------------------------------------
Spanning Tree Group 30: On (PVRST)
VLANs:  30

Current Root:            Path-Cost  Port Hello MaxAge FwdDel
 601e 08:17:f4:32:bb:00     2000   EXT22    2     20     15

Parameters:  Priority  Hello  MaxAge  FwdDel  Aging   Topology Change Counts
              61470      2      20      15     300                  4

    Port      Prio    Cost    State  Role Designated Bridge      Des Port    Type
------------- ---- ---------- -----  ---- ---------------------- -------- ----------
EXT4           128     20000!  FWD   DESG f01e-08:17:f4:76:78:00     8020        P2P
EXT21          128      2000!  DISC  ALTN 701e-fc:cf:62:9d:67:00     803f     Shared
EXT22          128      2000!  FWD   ROOT 601e-08:17:f4:32:bb:00     803f     Shared
! = Automatic path cost.

-----------------------------------------------------------------
Spanning Tree Group 40: On (PVRST)
VLANs:  40

Current Root:            Path-Cost  Port Hello MaxAge FwdDel
 6028 fc:cf:62:9d:67:00     2000   EXT21    2     20     15

Parameters:  Priority  Hello  MaxAge  FwdDel  Aging   Topology Change Counts
              61480      2      20      15     300                  3

    Port      Prio    Cost    State  Role Designated Bridge      Des Port    Type
------------- ---- ---------- -----  ---- ---------------------- -------- ----------
EXT4           128     20000!  FWD   DESG f028-08:17:f4:76:78:00     8020        P2P
EXT21          128      2000!  FWD   ROOT 6028-fc:cf:62:9d:67:00     803f     Shared
EXT22          128      2000!  DISC  ALTN 7028-08:17:f4:32:bb:00     803f     Shared
! = Automatic path cost.

-----------------------------------------------------------------
Spanning Tree Group 128: Off (PVRST), FDB aging timer 300
VLANs:  4095

    Port      Prio    Cost    State  Role Designated Bridge      Des Port    Type
------------- ---- ---------- -----  ---- ---------------------- -------- ----------
MGT1             0         0   FWD *
* = STP turned off for this port.
```

Example 3-4 Verifying the PVRST spanning tree configuration: G8264 switch 1

```
G8264_1#sh spanning-tree
-----------------------------------------------------------------
Pvst+ compatibility mode enabled

-----------------------------------------------------------------
Spanning Tree Group 1: On (PVRST)
VLANs:  1

Current Root:            Path-Cost  Port Hello MaxAge FwdDel
 8001 08:17:f4:32:bb:00        0       0    2     20     15

Parameters:  Priority  Hello  MaxAge  FwdDel  Aging   Topology Change Counts
              32769      2      20      15     300                  7

    Port      Prio    Cost    State  Role Designated Bridge      Des Port    Type
------------- ---- ---------- -----  ---- ---------------------- -------- ----------

Note: There is no active STP port in Spanning Tree Group 1.

-----------------------------------------------------------------
Spanning Tree Group 10: On (PVRST)
VLANs:  10

Current Root:            Path-Cost  Port Hello MaxAge FwdDel
 600a 08:17:f4:32:bb:00        0       0    2     20     15

Parameters:  Priority  Hello  MaxAge  FwdDel  Aging   Topology Change Counts
              24586      2      20      15     300                  3

    Port      Prio    Cost    State  Role Designated Bridge      Des Port    Type
------------- ---- ---------- -----  ---- ---------------------- -------- ----------
17             128      2000!  FWD   DESG 600a-08:17:f4:32:bb:00     8011        P2P
63             128      2000!  FWD   DESG 600a-08:17:f4:32:bb:00     803f        P2P
! = Automatic path cost.

-----------------------------------------------------------------
Spanning Tree Group 20: On (PVRST)
VLANs:  20

Current Root:            Path-Cost  Port Hello MaxAge FwdDel
 6014 fc:cf:62:9d:67:00     2000      17    2     20     15

Parameters:  Priority  Hello  MaxAge  FwdDel  Aging   Topology Change Counts
              28692      2      20      15     300                  2

    Port      Prio    Cost    State  Role Designated Bridge      Des Port    Type
------------- ---- ---------- -----  ---- ---------------------- -------- ----------
17             128      2000!  FWD   ROOT 6014-fc:cf:62:9d:67:00     8011        P2P
63             128      2000!  FWD   DESG 7014-08:17:f4:32:bb:00     803f        P2P
! = Automatic path cost.

-----------------------------------------------------------------
Spanning Tree Group 30: On (PVRST)
VLANs:  30

Current Root:            Path-Cost  Port Hello MaxAge FwdDel
 601e 08:17:f4:32:bb:00        0       0    2     20     15
```

```
Parameters:  Priority  Hello  MaxAge  FwdDel  Aging   Topology Change Counts
              24606      2      20      15     300                  3

    Port      Prio    Cost    State  Role Designated Bridge      Des Port    Type
------------- ---- ---------- -----  ---- ---------------------- -------- ----------
17             128      2000!  FWD   DESG 601e-08:17:f4:32:bb:00     8011        P2P
63             128      2000!  FWD   DESG 601e-08:17:f4:32:bb:00     803f        P2P
! = Automatic path cost.

-------------------------------------------------------------------
Spanning Tree Group 40: On (PVRST)
VLANs:  40

Current Root:            Path-Cost  Port Hello MaxAge FwdDel
 6028 fc:cf:62:9d:67:00     2000      17    2     20     15

Parameters:  Priority  Hello  MaxAge  FwdDel  Aging   Topology Change Counts
              28712      2      20      15     300                  2

    Port      Prio    Cost    State  Role Designated Bridge      Des Port    Type
------------- ---- ---------- -----  ---- ---------------------- -------- ----------
17             128      2000!  FWD   ROOT 6028-fc:cf:62:9d:67:00     8011        P2P
63             128      2000!  FWD   DESG 7028-08:17:f4:32:bb:00     803f        P2P
! = Automatic path cost.

-------------------------------------------------------------------
Spanning Tree Group 128: Off (PVRST), FDB aging timer 300
VLANs:  4095

    Port      Prio    Cost    State  Role Designated Bridge      Des Port    Type
------------- ---- ---------- -----  ---- ---------------------- -------- ----------
MGT              0         0   FWD *
* = STP turned off for this port.
```

Example 3-5 Verifying the PVRST spanning tree configuration: G8264 switch 2

```
G8264_2#sh spanning-tree
-----------------------------------------------------------------
Pvst+ compatibility mode enabled

-----------------------------------------------------------------
Spanning Tree Group 1: On (PVRST)
VLANs:  1

Current Root:            Path-Cost  Port Hello MaxAge FwdDel
 8001 fc:cf:62:9d:67:00        0       0    2     20     15

Parameters:  Priority  Hello  MaxAge  FwdDel  Aging   Topology Change Counts
              32769      2      20      15     300                  0

    Port      Prio    Cost    State  Role Designated Bridge      Des Port    Type
------------- ---- ---------- -----  ---- ---------------------- -------- ----------

Note: There is no active STP port in Spanning Tree Group 1.

-----------------------------------------------------------------
Spanning Tree Group 10: On (PVRST)
VLANs:  10

Current Root:            Path-Cost  Port Hello MaxAge FwdDel
 600a 08:17:f4:32:bb:00     2000      17    2     20     15

Parameters:  Priority  Hello  MaxAge  FwdDel  Aging   Topology Change Counts
              28682      2      20      15     300                  3

    Port      Prio    Cost    State  Role Designated Bridge      Des Port    Type
------------- ---- ---------- -----  ---- ---------------------- -------- ----------
17             128      2000!  FWD   ROOT 600a-08:17:f4:32:bb:00     8011        P2P
63             128      2000!  FWD   DESG 700a-fc:cf:62:9d:67:00     803f        P2P
! = Automatic path cost.

-----------------------------------------------------------------
Spanning Tree Group 20: On (PVRST)
VLANs:  20

Current Root:            Path-Cost  Port Hello MaxAge FwdDel
 6014 fc:cf:62:9d:67:00        0       0    2     20     15

Parameters:  Priority  Hello  MaxAge  FwdDel  Aging   Topology Change Counts
              24596      2      20      15     300                  2

    Port      Prio    Cost    State  Role Designated Bridge      Des Port    Type
------------- ---- ---------- -----  ---- ---------------------- -------- ----------
17             128      2000!  FWD   DESG 6014-fc:cf:62:9d:67:00     8011        P2P
63             128      2000!  FWD   DESG 6014-fc:cf:62:9d:67:00     803f        P2P
! = Automatic path cost.

-----------------------------------------------------------------
Spanning Tree Group 30: On (PVRST)
VLANs:  30

Current Root:            Path-Cost  Port Hello MaxAge FwdDel
 601e 08:17:f4:32:bb:00     2000      17    2     20     15
```

```
Parameters:  Priority  Hello  MaxAge  FwdDel  Aging   Topology Change Counts
              28702      2      20      15     300                  3

    Port      Prio    Cost    State  Role Designated Bridge      Des Port    Type
------------- ---- ---------- -----  ---- ---------------------- -------- ----------
17             128      2000!  FWD   ROOT 601e-08:17:f4:32:bb:00     8011        P2P
63             128      2000!  FWD   DESG 701e-fc:cf:62:9d:67:00     803f        P2P
! = Automatic path cost.

-------------------------------------------------------------------
Spanning Tree Group 40: On (PVRST)
VLANs:  40

Current Root:            Path-Cost  Port Hello MaxAge FwdDel
 6028 fc:cf:62:9d:67:00        0       0    2     20     15

Parameters:  Priority  Hello  MaxAge  FwdDel  Aging   Topology Change Counts
              24616      2      20      15     300                  2

    Port      Prio    Cost    State  Role Designated Bridge      Des Port    Type
------------- ---- ---------- -----  ---- ---------------------- -------- ----------
17             128      2000!  FWD   DESG 6028-fc:cf:62:9d:67:00     8011        P2P
63             128      2000!  FWD   DESG 6028-fc:cf:62:9d:67:00     803f        P2P
! = Automatic path cost.

-------------------------------------------------------------------
Spanning Tree Group 128: Off (PVRST), FDB aging timer 300
VLANs:  4095

    Port      Prio    Cost    State  Role Designated Bridge      Des Port    Type
------------- ---- ---------- -----  ---- ---------------------- -------- ----------
MGT              0         0   FWD *
* = STP turned off for this port.
```

3.2.4 Show running-config of all switches in Use Case 1

In the configuration output of the IBM Flex Switch and the IBM rack switches that are shown in the following examples, you can see the necessary configuration steps we did during our test. Important parameters and details are highlighted in red:

- EN2029: Example 3-6 on page 26
- G8264 switch 1: Example 3-7 on page 27
- G8264 switch 2: Example 3-8 on page 29

Example 3-6 Output from show running: EN2092 switch

```
Flex#sh run
Current configuration:
!
version "7.2.2.2"
switch-type "IBM Flex System EN2092 1Gb Ethernet Scalable Switch"
!
…
!
hostname "Flex"
…
!
interface port INTA2
        tagging
        exit
!
interface port INTA7
        shutdown
        exit
!
interface port EXT4
        name "TEST_PC"
        tagging
        exit
!
interface port EXT21
        name "TO_G8264_2_Port63"
        tagging
        pvid 10
        exit
!
interface port EXT22
        name "TO_G8264_1_Port63"
        tagging
        pvid 10
        exit
!
interface port EXT23
        name "TO_G8264_1_Port64"
        shutdown
        tagging
        pvid 10
        exit
!
interface port EXT24
        name "TO_G8264_2_Port64"
        shutdown
        tagging
        pvid 10
        exit
!
vlan 1
        member INTA1-EXT20
        no member EXT21-EXT24
!
!
vlan 10
        enable
        name "Server"
        member EXT4,EXT21-EXT24
```

```
!
!
vlan 20
        enable
        name "Data20"
        member EXT4,EXT21-EXT24
!
!
vlan 30
        enable
        name "Data30"
        member EXT4,EXT21-EXT24
!
!
vlan 40
        enable
        name "Data40"
        member EXT4,EXT21-EXT24
!
!
!
spanning-tree stp 10 vlan 10

spanning-tree stp 20 vlan 20

spanning-tree stp 30 vlan 30

spanning-tree stp 40 vlan 40

!
lldp enable
!
…
!
end
```

Example 3-7 Output from show running command: 8264 switch 1

```
G8264_1#sh run
Current configuration:
!
version "7.2.2"
switch-type "IBM Networking Operating System RackSwitch G8264"
!
!
!
!
no system dhcp
hostname "G8264_1"
system idle 60
!
!
interface port 17
        name "CrossLink"
        tagging
        pvid 10
        exit
!
```

```
interface port 18
        shutdown
        tagging
        pvid 10
        exit
!
interface port 63
        tagging
        pvid 10
        exit
!
interface port 64
        shutdown
        tagging
        pvid 10
        exit
!
vlan 1
        member 1-16,19-62
        no member 17-18,63-64
!
!
vlan 10
        enable
        name "none"
        member 17-18,63-64
!
!
vlan 20
        enable
        name "none"
        member 17-18,63-64
!
!
vlan 30
        enable
        name "none"
        member 17-18,63-64
!
!
vlan 40
        enable
        name "VLAN 40"
        member 17-18,63-64
!
!
!
spanning-tree stp 10 bridge priority 24576
spanning-tree stp 10 vlan 10

spanning-tree stp 20 bridge priority 28672
spanning-tree stp 20 vlan 20

spanning-tree stp 30 bridge priority 24576
spanning-tree stp 30 vlan 30

spanning-tree stp 40 bridge priority 28672
spanning-tree stp 40 vlan 40

!
```

```
!
lldp enable
!
…
!
end
```

Example 3-8 Output from show running command: G8264 switch 2

```
G8264_2#sh run
Current configuration:
!
version "7.2.2"
switch-type "IBM Networking Operating System RackSwitch G8264"
!
!

!
!
no system dhcp
hostname "G8264_2"
system idle 60
!
!
interface port 17
        name "CrossLink"
        tagging
        pvid 10
        exit
!
interface port 18
        shutdown
        tagging
        pvid 10
        exit
!
interface port 63
        tagging
        pvid 10
        exit
!
interface port 64
        shutdown
        tagging
        pvid 10
        exit
!
vlan 1
        member 1-16,19-62
        no member 17-18,63-64
!
!
vlan 10
        enable
        name "none"
        member 17-18,63-64
!
!
```

```
vlan 20
        enable
        name "none"
        member 17-18,63-64
!
!
vlan 30
        enable
        name "none"
        member 17-18,63-64
!
!
vlan 40
        enable
        name "VLAN 40"
        member 17-18,63-64
!
!
!
spanning-tree stp 10 bridge priority 28672
spanning-tree stp 10 vlan 10

spanning-tree stp 20 bridge priority 24576
spanning-tree stp 20 vlan 20

spanning-tree stp 30 bridge priority 28672
spanning-tree stp 30 vlan 30

spanning-tree stp 40 bridge priority 24576
spanning-tree stp 40 vlan 40

!
!
lldp enable
!
…
!
!
end
```

3.3 Use Case 2: Link aggregation and PVRST

In our second use case, we added aggregation links and used three pairs of 10 GE links to connect the switches. We also configured 802.1q trunks with LACP and PVRST. For load balancing, odd VLANS 10 and 30 and even VLANS 20 and 40 were used (see Figure 3-3 on page 31 and Figure 3-4 on page 31).

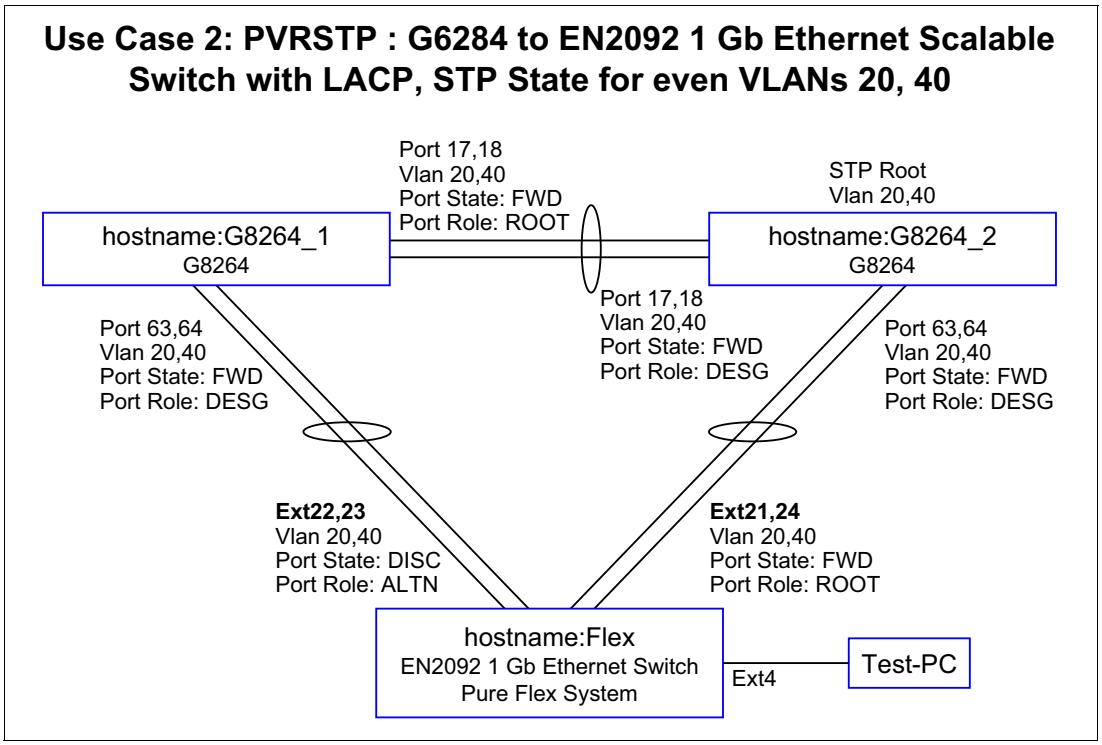

Figure 3-3 Use Case 2: Even-numbered VLANs

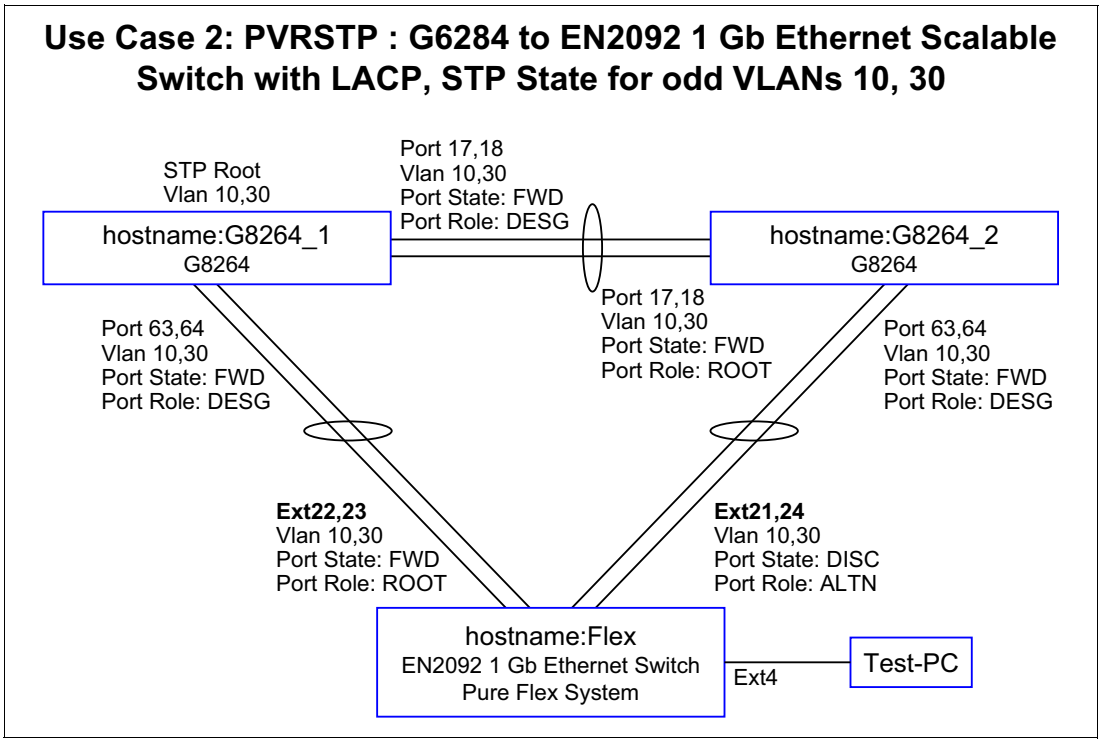

Figure 3-4 Use Case 2: Odd-numbered VLANs

3.3.1 Verifying the topology that is used by using lldp

To verify the topology, we used the **show lldp remote-device** command on the three switches, as shown in Example 3-9.

Example 3-9 Checking the topology use show lldp remote-device command

```
Flex#show lldp remote-device
LLDP Remote Devices Information

LocalPort | Index | Remote Chassis ID         | Remote Port          | Remote System Name
----------|-------|--------------------------|----------------------|-------------------
EXT22     | 1     | 08 17 f4 32 bb 00        | 63                   | G8264_1
EXT21     | 2     | fc cf 62 9d 67 00        | 63                   | G8264_2
EXT23     | 5     | 08 17 f4 32 bb 00        | 64                   | G8264_1
EXT24     | 8     | fc cf 62 9d 67 00        | 64                   | G8264_2

G8264_1#sh lldp remote-device
LLDP Remote Devices Information

LocalPort | Index | Remote Chassis ID         | Remote Port          | Remote System Name
----------|-------|--------------------------|----------------------|-------------------
17        | 1     | fc cf 62 9d 67 00        | 17                   | G8264_2
63        | 2     | 08 17 f4 76 78 00        | 50                   | Flex
18        | 3     | fc cf 62 9d 67 00        | 18                   | G8264_2
64        | 4     | 08 17 f4 76 78 00        | 51                   | Flex

G8264_2#show lldp remote-device
LLDP Remote Devices Information

LocalPort | Index | Remote Chassis ID         | Remote Port          | Remote System Name
----------|-------|--------------------------|----------------------|-------------------
17        | 1     | 08 17 f4 32 bb 00        | 17                   | G8264_1
63        | 2     | 08 17 f4 76 78 00        | 49                   | Flex
18        | 3     | 08 17 f4 32 bb 00        | 18                   | G8264_1
64        | 4     | 08 17 f4 76 78 00        | 52                   | Flex
```

3.3.2 Verifying trunks

To verify which VLANs are active on which trunk, we used the **show interface trunk** command on the three switches, as shown in Example 3-10.

Example 3-10 Show interface trunk command

```
Flex#show interface trunk
Alias   Port Tag RMON Lrn Fld PVID       NAME                 VLAN(s)
------- ---- --- ---- --- --- ----- -------------- -------------------------------
EXT21   49    y   d    e   e    10  TO_G8264_2_Port63 10 20 30 40
EXT22   50    y   d    e   e    10  TO_G8264_1_Port63 10 20 30 40
EXT23   51    y   d    e   e    10  TO_G8264_1_Port64 10 20 30 40
EXT24   52    y   d    e   e    10  TO_G8264_2_Port64 10 20 30 40
* = PVID is tagged.

G8264_1#sh int trunk
Alias   Port Tag RMON Lrn Fld PVID       NAME                 VLAN(s)
------- ---- --- ---- --- --- ----- -------------- -------------------------------
17      17    y   d    e   e    10  CrossLink      10 20 30 40
18      18    y   d    e   e    10  CrossLink      10 20 30 40
63      63    y   d    e   e    10  UPLINK_TO_FLEX 10 20 30 40
64      64    y   d    e   e    10  UPLINK_TO_FLEX 10 20 30 40
...
* = PVID is tagged.

G8264_2#sh int trunk
Alias   Port Tag RMON Lrn Fld PVID       NAME                 VLAN(s)
------- ---- --- ---- --- --- ----- -------------- -------------------------------
17      17    y   d    e   e    10  CrossLink      10 20 30 40
18      18    y   d    e   e    10  CrossLink      10 20 30 40
63      63    y   d    e   e    10  UPLINK_TO_FLEX 10 20 30 40
64      64    y   d    e   e    10  UPLINK_TO_FLEX 10 20 30 40

* = PVID is tagged.
```

3.3.3 Verifying link aggregation by using lacp

We verified the link aggregation configuration of the three switches by executing the **show lacp information** command, as shown in Example 3-11.

Example 3-11 Show lacp information command

```
Flex#sh lacp information
port    mode    adminkey  operkey  selected   prio  aggr  trunk  status  minlinks
--------------------------------------------------------------------------------
EXT21   active       121      121    yes     32768    49     53    up        1
EXT22   active       122      122    yes     32768    50     54    up        1
EXT23   active       122      122    yes     32768    50     54    up        1
EXT24   active       121      121    yes     32768    49     53    up        1
!--- The “aggr”  and “trunk” column identifies the ports which are configured together as
link aggregation, i.e.trunk 53 is made of EXT21 and EXT24 .

G8264_1(config)#sh lacp information
port    mode    adminkey  operkey  selected   prio  aggr  trunk  status  minlinks
--------------------------------------------------------------------------------
17      active       117      117    yes     32768    17     65    up        1
18      active       117      117    yes     32768    17     65    up        1
63      active       163      163    yes     32768    63     66    up        1
64      active       163      163    yes     32768    63     66    up        1

G8264_2#sh lacp information
port    mode    adminkey  operkey  selected   prio  aggr  trunk  status  minlinks
--------------------------------------------------------------------------------
17      active       117      117    yes     32768    17     65    up        1
18      active       117      117    yes     32768    17     65    up        1
63      active       163      163    yes     32768    63     66    up        1
64      active       163      163    yes     32768    63     66    up        1
```

3.3.4 Verifying PVRST spanning tree configuration

In the next step, we verified the PVRST spanning tree configuration of the switches by executing the **show spanning-tree** command. As shown in Figure 3-3 on page 31 and Figure 3-4 on page 31, we have two spanning trees, one for even VLANs and one for odd VLANs. By using the show spanning tree command, you can verify the status of the respective Ethernet interface’s VLAN, port state, and port role.

The commands that were run on the three switches produced the following outputs:

- EN2029: Example 3-12 on page 35
- G8264 switch 1: Example 3-13 on page 37
- G8264 switch 2: Example 3-14 on page 39

Example 3-12 Output from show spanning tree command: Flex System switch

```
Flex#show spanning-tree
-----------------------------------------------------------------
Pvst+ compatibility mode enabled

-----------------------------------------------------------------
Spanning Tree Group 1: On (PVRST)
VLANs:  1

Current Root:            Path-Cost  Port Hello MaxAge FwdDel
 8000 00:16:ca:a1:c1:00    20000    EXT3    2     20     15

Parameters:  Priority  Hello  MaxAge  FwdDel  Aging   Topology Change Counts
              61441      2      20      15     300                  3

    Port      Prio    Cost    State  Role Designated Bridge      Des Port    Type
------------- ---- ---------- -----  ---- ---------------------- -------- ----------
INTA1            0         0   FWD *
INTA2            0         0   FWD *
INTA4            0         0   FWD *
EXT1           128     20000!  FWD   DESG f001-08:17:f4:76:78:00     801d        P2P
EXT2           128     20000!  FWD   DESG f001-08:17:f4:76:78:00     801e        P2P
EXT3           128     20000!  FWD   ROOT 8000-00:16:ca:a1:c1:00     8011        P2P
EXT4           128     20000!  FWD   DESG f001-08:17:f4:76:78:00     8020        P2P
EXT5           128     20000!  FWD   DESG f001-08:17:f4:76:78:00     8021        P2P
EXT7           128     20000!  FWD   DESG f001-08:17:f4:76:78:00     8023        P2P
* = STP turned off for this port.
! = Automatic path cost.

-----------------------------------------------------------------
Spanning Tree Group 10: On (PVRST)
VLANs:  10

Current Root:            Path-Cost  Port Hello MaxAge FwdDel
 600a 08:17:f4:32:bb:00      990   EXT22    2     20     15

Parameters:  Priority  Hello  MaxAge  FwdDel  Aging   Topology Change Counts
              61450      2      20      15     300                  8

    Port      Prio    Cost    State  Role Designated Bridge      Des Port    Type
------------- ---- ---------- -----  ---- ---------------------- -------- ----------
EXT4           128     20000!  FWD   DESG f00a-08:17:f4:76:78:00     8020        P2P
EXT21 (pc53)   128       990!+ DISC  ALTN 700a-fc:cf:62:9d:67:00     8083        P2P
EXT22 (pc54)   128       990!+ FWD   ROOT 600a-08:17:f4:32:bb:00     8083        P2P
EXT23 (pc54)   128       990!+ FWD   ROOT 600a-08:17:f4:32:bb:00     8083        P2P
EXT24 (pc53)   128       990!+ DISC  ALTN 700a-fc:cf:62:9d:67:00     8083        P2P
! = Automatic path cost.
+ = Portchannel cost, not the individual port cost.

!--- Please note the portchannel identifier  after the port number, i.e. pc53, pc54

-----------------------------------------------------------------
Spanning Tree Group 20: On (PVRST)
VLANs:  20

Current Root:            Path-Cost  Port Hello MaxAge FwdDel
 6014 fc:cf:62:9d:67:00      990   EXT21    2     20     15

Parameters:  Priority  Hello  MaxAge  FwdDel  Aging   Topology Change Counts
              61460      2      20      15     300                 10
```

```
    Port      Prio    Cost    State  Role Designated Bridge      Des Port    Type
------------- ---- ---------- -----  ---- ---------------------- -------- ----------
EXT4           128     20000!  FWD   DESG f014-08:17:f4:76:78:00     8020        P2P
EXT21 (pc53)   128       990!+ FWD   ROOT 6014-fc:cf:62:9d:67:00     8083        P2P
EXT22 (pc54)   128       990!+ DISC  ALTN 7014-08:17:f4:32:bb:00     8083        P2P
EXT23 (pc54)   128       990!+ DISC  ALTN 7014-08:17:f4:32:bb:00     8083        P2P
EXT24 (pc53)   128       990!+ FWD   ROOT 6014-fc:cf:62:9d:67:00     8083        P2P
! = Automatic path cost.
+ = Portchannel cost, not the individual port cost.

-------------------------------------------------------------------
Spanning Tree Group 30: On (PVRST)
VLANs:  30

Current Root:            Path-Cost  Port Hello MaxAge FwdDel
 601e 08:17:f4:32:bb:00      990   EXT22    2     20     15

Parameters:  Priority  Hello  MaxAge  FwdDel  Aging   Topology Change Counts
              61470      2      20      15     300                  8

    Port      Prio    Cost    State  Role Designated Bridge      Des Port    Type
------------- ---- ---------- -----  ---- ---------------------- -------- ----------
EXT4           128     20000!  FWD   DESG f01e-08:17:f4:76:78:00     8020        P2P
EXT21 (pc53)   128       990!+ DISC  ALTN 701e-fc:cf:62:9d:67:00     8083        P2P
EXT22 (pc54)   128       990!+ FWD   ROOT 601e-08:17:f4:32:bb:00     8083        P2P
EXT23 (pc54)   128       990!+ FWD   ROOT 601e-08:17:f4:32:bb:00     8083        P2P
EXT24 (pc53)   128       990!+ DISC  ALTN 701e-fc:cf:62:9d:67:00     8083        P2P
! = Automatic path cost.
+ = Portchannel cost, not the individual port cost.

-------------------------------------------------------------------
Spanning Tree Group 40: On (PVRST)
VLANs:  40

Current Root:            Path-Cost  Port Hello MaxAge FwdDel
 6028 fc:cf:62:9d:67:00      990   EXT21    2     20     15

Parameters:  Priority  Hello  MaxAge  FwdDel  Aging   Topology Change Counts
              61480      2      20      15     300                 10

    Port      Prio    Cost    State  Role Designated Bridge      Des Port    Type
------------- ---- ---------- -----  ---- ---------------------- -------- ----------
EXT4           128     20000!  FWD   DESG f028-08:17:f4:76:78:00     8020        P2P
EXT21 (pc53)   128       990!+ FWD   ROOT 6028-fc:cf:62:9d:67:00     8083        P2P
EXT22 (pc54)   128       990!+ DISC  ALTN 7028-08:17:f4:32:bb:00     8083        P2P
EXT23 (pc54)   128       990!+ DISC  ALTN 7028-08:17:f4:32:bb:00     8083        P2P
EXT24 (pc53)   128       990!+ FWD   ROOT 6028-fc:cf:62:9d:67:00     8083        P2P
! = Automatic path cost.
+ = Portchannel cost, not the individual port cost.

-------------------------------------------------------------------
Spanning Tree Group 128: Off (PVRST), FDB aging timer 300
VLANs:  4095

    Port      Prio    Cost    State  Role Designated Bridge      Des Port    Type
------------- ---- ---------- -----  ---- ---------------------- -------- ----------
MGT1             0          0   FWD *
* = STP turned off for this port.
```

Example 3-13 Output from show spanning tree command: G8264 switch 1

```
G8264_1(config)#sh spanning-tree
----------------------------------------------------------------
Pvst+ compatibility mode enabled

----------------------------------------------------------------
Spanning Tree Group 1: On (PVRST)
VLANs:  1

Current Root:            Path-Cost  Port Hello MaxAge FwdDel
 8001 08:17:f4:32:bb:00        0       0    2     20     15

Parameters:  Priority  Hello  MaxAge  FwdDel  Aging   Topology Change Counts
              32769      2      20      15     300                  7

    Port      Prio    Cost    State  Role Designated Bridge      Des Port    Type
------------- ---- ---------- -----  ---- ---------------------- -------- ----------

!--- Note: There is no active STP port in Spanning Tree Group 1.

----------------------------------------------------------------
Spanning Tree Group 10: On (PVRST)
VLANs:  10

Current Root:            Path-Cost  Port Hello MaxAge FwdDel
 600a 08:17:f4:32:bb:00        0       0    2     20     15

Parameters:  Priority  Hello  MaxAge  FwdDel  Aging   Topology Change Counts
              24586      2      20      15     300                  7

    Port      Prio    Cost    State  Role Designated Bridge      Des Port    Type
------------- ---- ---------- -----  ---- ---------------------- -------- ----------
17    (pc65)   128       990!+ FWD   DESG 600a-08:17:f4:32:bb:00     8082        P2P
18    (pc65)   128       990!+ FWD   DESG 600a-08:17:f4:32:bb:00     8082        P2P
63    (pc66)   128       990!+ FWD   DESG 600a-08:17:f4:32:bb:00     8083        P2P
64    (pc66)   128       990!+ FWD   DESG 600a-08:17:f4:32:bb:00     8083        P2P
! = Automatic path cost.
+ = Portchannel cost, not the individual port cost.

----------------------------------------------------------------
Spanning Tree Group 20: On (PVRST)
VLANs:  20

Current Root:            Path-Cost  Port Hello MaxAge FwdDel
 6014 fc:cf:62:9d:67:00      990      17    2     20     15

Parameters:  Priority  Hello  MaxAge  FwdDel  Aging   Topology Change Counts
              28692      2      20      15     300                  9

    Port      Prio    Cost    State  Role Designated Bridge      Des Port    Type
------------- ---- ---------- -----  ---- ---------------------- -------- ----------
17    (pc65)   128       990!+ FWD   ROOT 6014-fc:cf:62:9d:67:00     8082        P2P
18    (pc65)   128       990!+ FWD   ROOT 6014-fc:cf:62:9d:67:00     8082        P2P
63    (pc66)   128       990!+ FWD   DESG 7014-08:17:f4:32:bb:00     8083        P2P
64    (pc66)   128       990!+ FWD   DESG 7014-08:17:f4:32:bb:00     8083        P2P
! = Automatic path cost.
+ = Portchannel cost, not the individual port cost.
```

```
-----------------------------------------------------------------
Spanning Tree Group 30: On (PVRST)
VLANs:  30

Current Root:            Path-Cost  Port Hello MaxAge FwdDel
 601e 08:17:f4:32:bb:00        0       0    2     20     15

Parameters:  Priority  Hello  MaxAge  FwdDel  Aging   Topology Change Counts
              24606      2      20      15     300                  7

    Port      Prio    Cost    State  Role Designated Bridge      Des Port    Type
------------- ---- ---------- -----  ---- ---------------------- -------- ----------
17    (pc65)   128       990!+ FWD   DESG 601e-08:17:f4:32:bb:00     8082        P2P
18    (pc65)   128       990!+ FWD   DESG 601e-08:17:f4:32:bb:00     8082        P2P
63    (pc66)   128       990!+ FWD   DESG 601e-08:17:f4:32:bb:00     8083        P2P
64    (pc66)   128       990!+ FWD   DESG 601e-08:17:f4:32:bb:00     8083        P2P
! = Automatic path cost.
+ = Portchannel cost, not the individual port cost.

-----------------------------------------------------------------
Spanning Tree Group 40: On (PVRST)
VLANs:  40

Current Root:            Path-Cost  Port Hello MaxAge FwdDel
 6028 fc:cf:62:9d:67:00      990      17    2     20     15

Parameters:  Priority  Hello  MaxAge  FwdDel  Aging   Topology Change Counts
              28712      2      20      15     300                  9

    Port      Prio    Cost    State  Role Designated Bridge      Des Port    Type
------------- ---- ---------- -----  ---- ---------------------- -------- ----------
17    (pc65)   128       990!+ FWD   ROOT 6028-fc:cf:62:9d:67:00     8082        P2P
18    (pc65)   128       990!+ FWD   ROOT 6028-fc:cf:62:9d:67:00     8082        P2P
63    (pc66)   128       990!+ FWD   DESG 7028-08:17:f4:32:bb:00     8083        P2P
64    (pc66)   128       990!+ FWD   DESG 7028-08:17:f4:32:bb:00     8083        P2P
! = Automatic path cost.
+ = Portchannel cost, not the individual port cost.

-----------------------------------------------------------------
Spanning Tree Group 128: Off (PVRST), FDB aging timer 300
```

Example 3-14 Output from show spanning tree command: G8264 switch 2

```
G8264_2#sh spanning-tree
---------------------------------------------------------------------
Pvst+ compatibility mode enabled

---------------------------------------------------------------------
Spanning Tree Group 1: On (PVRST)
VLANs:  1

Current Root:            Path-Cost  Port Hello MaxAge FwdDel
 8001 fc:cf:62:9d:67:00        0       0    2     20     15

Parameters:  Priority  Hello  MaxAge  FwdDel  Aging   Topology Change Counts
              32769      2      20      15     300                  0

    Port      Prio    Cost    State  Role Designated Bridge      Des Port    Type
------------- ---- ---------- -----  ---- ---------------------- -------- ----------

Note: There is no active STP port in Spanning Tree Group 1.

---------------------------------------------------------------------
Spanning Tree Group 10: On (PVRST)
VLANs:  10

Current Root:            Path-Cost  Port Hello MaxAge FwdDel
 600a 08:17:f4:32:bb:00      990      17    2     20     15

Parameters:  Priority  Hello  MaxAge  FwdDel  Aging   Topology Change Counts
              28682      2      20      15     300                  6

    Port      Prio    Cost    State  Role Designated Bridge      Des Port    Type
------------- ---- ---------- -----  ---- ---------------------- -------- ----------
17    (pc65)   128       990!+ FWD   ROOT 600a-08:17:f4:32:bb:00     8082        P2P
18    (pc65)   128       990!+ FWD   ROOT 600a-08:17:f4:32:bb:00     8082        P2P
63    (pc66)   128       990!+ FWD   DESG 700a-fc:cf:62:9d:67:00     8083        P2P
64    (pc66)   128       990!+ FWD   DESG 700a-fc:cf:62:9d:67:00     8083        P2P
! = Automatic path cost.
+ = Portchannel cost, not the individual port cost.

---------------------------------------------------------------------
Spanning Tree Group 20: On (PVRST)
VLANs:  20

Current Root:            Path-Cost  Port Hello MaxAge FwdDel
 6014 fc:cf:62:9d:67:00        0       0    2     20     15

Parameters:  Priority  Hello  MaxAge  FwdDel  Aging   Topology Change Counts
              24596      2      20      15     300                  9

    Port      Prio    Cost    State  Role Designated Bridge      Des Port    Type
------------- ---- ---------- -----  ---- ---------------------- -------- ----------
17    (pc65)   128       990!+ FWD   DESG 6014-fc:cf:62:9d:67:00     8082        P2P
18    (pc65)   128       990!+ FWD   DESG 6014-fc:cf:62:9d:67:00     8082        P2P
63    (pc66)   128       990!+ FWD   DESG 6014-fc:cf:62:9d:67:00     8083        P2P
64    (pc66)   128       990!+ FWD   DESG 6014-fc:cf:62:9d:67:00     8083        P2P
! = Automatic path cost.
+ = Portchannel cost, not the individual port cost.

---------------------------------------------------------------------
Spanning Tree Group 30: On (PVRST)
```

```
VLANs:  30

Current Root:            Path-Cost  Port Hello MaxAge FwdDel
 601e 08:17:f4:32:bb:00      990      17    2     20     15

Parameters:  Priority  Hello  MaxAge  FwdDel  Aging   Topology Change Counts
              28702      2      20      15     300                  6

    Port      Prio    Cost    State  Role Designated Bridge      Des Port    Type
------------- ---- ---------- -----  ---- ---------------------- -------- ----------
17    (pc65)   128       990!+ FWD   ROOT 601e-08:17:f4:32:bb:00     8082        P2P
18    (pc65)   128       990!+ FWD   ROOT 601e-08:17:f4:32:bb:00     8082        P2P
63    (pc66)   128       990!+ FWD   DESG 701e-fc:cf:62:9d:67:00     8083        P2P
64    (pc66)   128       990!+ FWD   DESG 701e-fc:cf:62:9d:67:00     8083        P2P
! = Automatic path cost.
+ = Portchannel cost, not the individual port cost.

-------------------------------------------------------------------
Spanning Tree Group 40: On (PVRST)
VLANs:  40

Current Root:            Path-Cost  Port Hello MaxAge FwdDel
 6028 fc:cf:62:9d:67:00        0       0    2     20     15

Parameters:  Priority  Hello  MaxAge  FwdDel  Aging   Topology Change Counts
              24616      2      20      15     300                  9

    Port      Prio    Cost    State  Role Designated Bridge      Des Port    Type
------------- ---- ---------- -----  ---- ---------------------- -------- ----------
17    (pc65)   128       990!+ FWD   DESG 6028-fc:cf:62:9d:67:00     8082        P2P
18    (pc65)   128       990!+ FWD   DESG 6028-fc:cf:62:9d:67:00     8082        P2P
63    (pc66)   128       990!+ FWD   DESG 6028-fc:cf:62:9d:67:00     8083        P2P
64    (pc66)   128       990!+ FWD   DESG 6028-fc:cf:62:9d:67:00     8083        P2P
! = Automatic path cost.
+ = Portchannel cost, not the individual port cost.

-------------------------------------------------------------------
Spanning Tree Group 128: Off (PVRST), FDB aging timer 300
VLANs:  4095

    Port      Prio    Cost    State  Role Designated Bridge      Des Port    Type
------------- ---- ---------- -----  ---- ---------------------- -------- ----------
MGT              0         0   FWD *
* = STP turned off for this port.
```

3.3.5 Show running-config of all switches in Use Case 2

In the configuration output of the switches that is shown in Example 3-15, Example 3-16 on page 43, and Example 3-17 on page 45, you can see the configuration steps that we performed during our test. Important parameters and detail are highlighted in red.

Example 3-15 Output of the show running command: EN2092 switch

```
Flex#sh run
Current configuration:
!
version "7.2.2.2"
switch-type "IBM Flex System EN2092 1Gb Ethernet Scalable Switch"
!
hostname "Flex"
!
interface port INTA2
        tagging
        exit
!
interface port INTA7
        shutdown
        exit
!
interface port EXT4
        name "TEST_PC"
        tagging
        exit
!
interface port EXT21
        name "TO_G8264_2_Port63"
        tagging
        pvid 10
        exit
!
interface port EXT22
        name "TO_G8264_1_Port63"
        tagging
        pvid 10
        exit
!
interface port EXT23
        name "TO_G8264_1_Port64"
        tagging
        pvid 10
        exit
!
interface port EXT24
        name "TO_G8264_2_Port64"
        tagging
        pvid 10
        exit
!
vlan 1
        member INTA1-EXT20
        no member EXT21-EXT24
!
vlan 10
        enable
        name "Server"
```

```
        member EXT4,EXT21-EXT24
!
vlan 20
        enable
        name "Data20"
        member EXT4,EXT21-EXT24
!
vlan 30
        enable
        name "Data30"
        member EXT4,EXT21-EXT24
!
vlan 40
        enable
        name "Data40"
        member EXT4,EXT21-EXT24
!
spanning-tree stp 10 vlan 10

spanning-tree stp 20 vlan 20

spanning-tree stp 30 vlan 30

spanning-tree stp 40 vlan 40

!
interface port EXT21
        lacp mode active
        lacp key 121
!
interface port EXT22
        lacp mode active
        lacp key 122
!
interface port EXT23
        lacp mode active
        lacp key 122
!
interface port EXT24
        lacp mode active
        lacp key 121
!
lldp enable
!
end
```

Example 3-16 Output of the show running command: G8264 switch 1

```
G8264_1#sh run
Current configuration:
!
version "7.2.2"
switch-type "IBM Networking Operating System RackSwitch G8264"
!
hostname "G8264_1"
!
interface port 17
        name "CrossLink"
        tagging
        pvid 10
        exit
!
interface port 18
        name "CrossLink"
        tagging
        pvid 10
        exit
!
interface port 63
        name "UPLINK_TO_FLEX"
        tagging
        pvid 10
        exit
!
interface port 64
        name "UPLINK_TO_FLEX"
        tagging
        pvid 10
        exit
!
vlan 1
        member 1-16,19-62
        no member 17-18,63-64
!
vlan 10
        enable
        name "none"
        member 17-18,63-64
!
vlan 20
        enable
        name "none"
        member 17-18,63-64
!
vlan 30
        enable
        name "none"
        member 17-18,63-64
!
vlan 40
        enable
        name "VLAN 40"
        member 17-18,63-64
!
spanning-tree stp 10 bridge priority 24576
spanning-tree stp 10 vlan 10
```

```
spanning-tree stp 20 bridge priority 28672
spanning-tree stp 20 vlan 20

spanning-tree stp 30 bridge priority 24576
spanning-tree stp 30 vlan 30

spanning-tree stp 40 bridge priority 28672
spanning-tree stp 40 vlan 40

!
interface port 17
        lacp mode active
        lacp key 117
!
interface port 18
        lacp mode active
        lacp key 117
!
interface port 63
        lacp mode active
        lacp key 163
!
interface port 64
        lacp mode active
        lacp key 163
!
lldp enable
!
end
```

Example 3-17 Output of the show running command: G8264 switch 2

```
G8264_2#sh run
Current configuration:
!
version "7.2.2"
switch-type "IBM Networking Operating System RackSwitch G8264"
!
hostname "G8264_2"
!
interface port 17
        name "CrossLink"
        tagging
        pvid 10
        exit
!
interface port 18
        name "CrossLink"
        tagging
        pvid 10
        exit
!
interface port 63
        name "UPLINK_TO_FLEX"
        tagging
        pvid 10
        exit
!
interface port 64
        name "UPLINK_TO_FLEX"
        tagging
        pvid 10
        exit
!
vlan 1
        member 1-16,19-62
        no member 17-18,63-64
!
vlan 10
        enable
        name "none"
        member 17-18,63-64
!
vlan 20
        enable
        name "none"
        member 17-18,63-64
!
vlan 30
        enable
        name "none"
        member 17-18,63-64
!
vlan 40
        enable
        name "VLAN 40"
        member 17-18,63-64
!
spanning-tree stp 10 bridge priority 28672
spanning-tree stp 10 vlan 10
```

```
spanning-tree stp 20 bridge priority 24576
spanning-tree stp 20 vlan 20

spanning-tree stp 30 bridge priority 28672
spanning-tree stp 30 vlan 30

spanning-tree stp 40 bridge priority 24576
spanning-tree stp 40 vlan 40

!
interface port 17
        lacp mode active
        lacp key 117
!
interface port 18
        lacp mode active
        lacp key 117
!
interface port 63
        lacp mode active
        lacp key 163
!
interface port 64
        lacp mode active
        lacp key 163
!
lldp enable
!
end
```

3.4 Use Case 3: Link aggregation and MST

For this use case, we replaced the PVRST with MST. Again, we have three pairs of 10 GE links between the three switches, which were running 802.1q trunking and LACP. The VLANs 10 and 30, and 20 and 40 are manually distributed over the uplinks from the Flex switch, as shown in Figure 3-5 and Figure 3-6 on page 48.

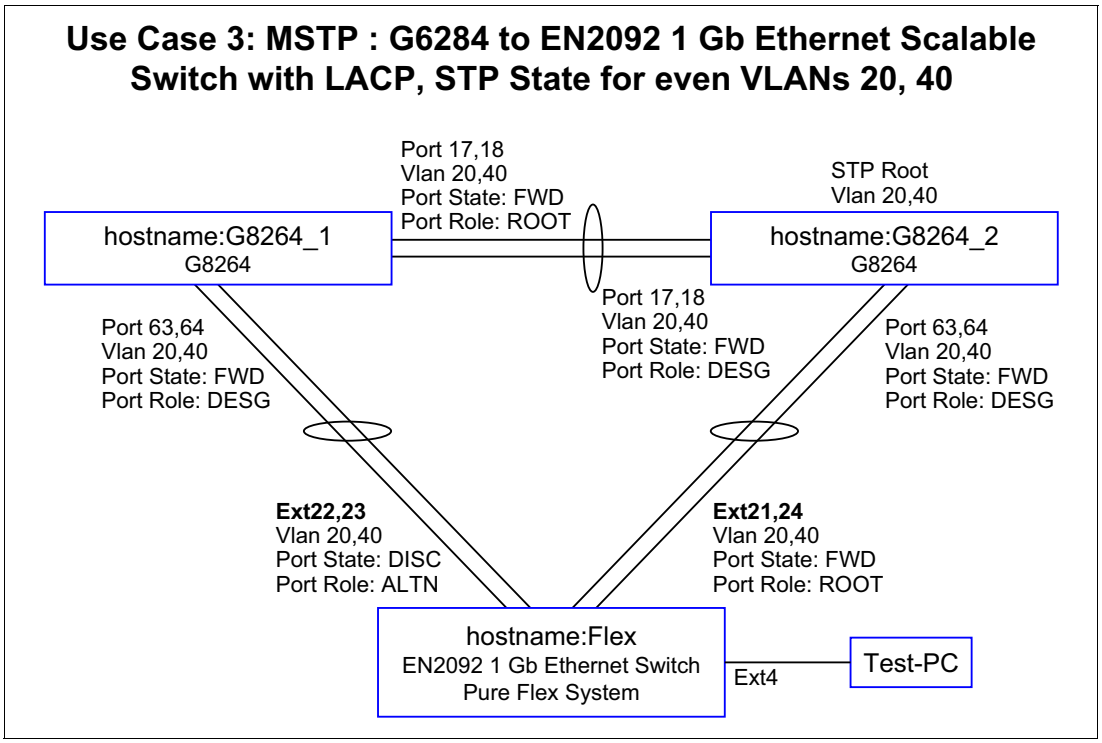

Figure 3-5 Use Case 3: Even-numbered VLANs

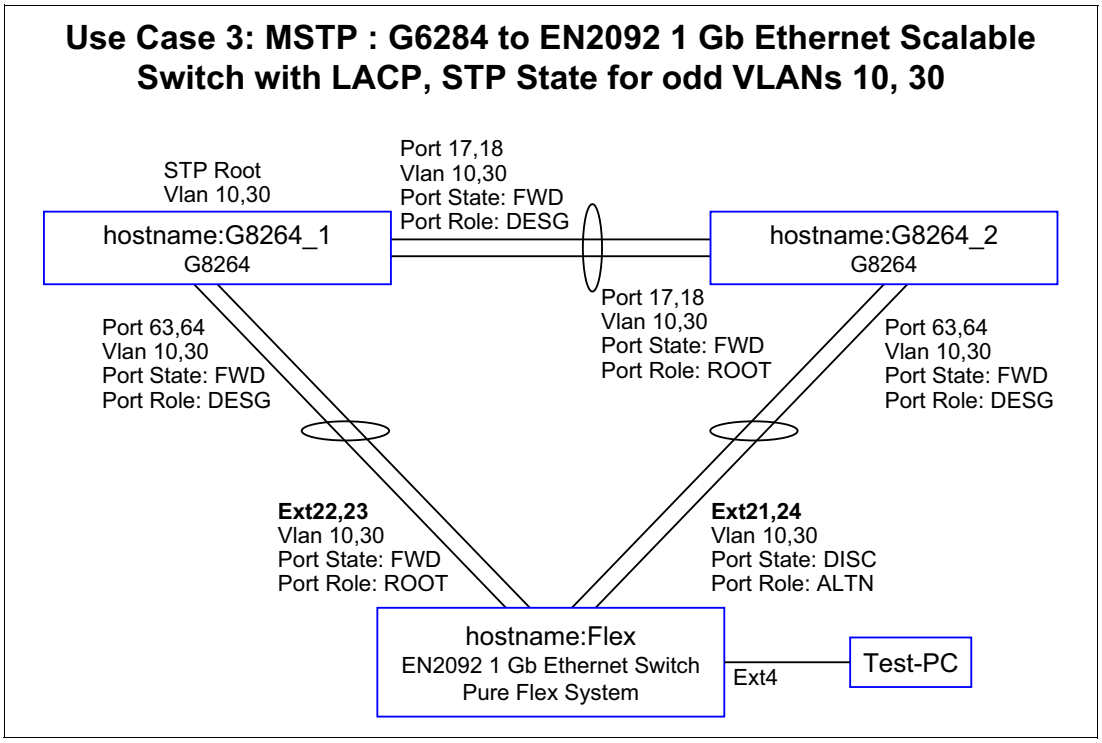

Figure 3-6 Use Case 3: Odd-numbered VLANs

3.4.1 Verifying the topology that was used by using lldp

To verify the topology, we used the **show lldp remote-device** command on the switches, as shown in Example 3-18.

Example 3-18 Checking the topology use show lldp remote-device command

```
Flex#sh lldp remote-device
LLDP Remote Devices Information

LocalPort | Index | Remote Chassis ID         | Remote Port          | Remote System Name
----------|-------|--------------------------|----------------------|-------------------------------
EXT22     | 1     | 08 17 f4 32 bb 00        | 63                   | G8264_1
EXT21     | 2     | fc cf 62 9d 67 00        | 63                   | G8264_2
EXT23     | 5     | 08 17 f4 32 bb 00        | 64                   | G8264_1
EXT24     | 8     | fc cf 62 9d 67 00        | 64                   | G8264_2

G8264_1#sh lldp remote-device
LLDP Remote Devices Information

LocalPort | Index | Remote Chassis ID         | Remote Port          | Remote System Name
----------|-------|--------------------------|----------------------|-------------------------------
17        | 1     | fc cf 62 9d 67 00        | 17                   | G8264_2
63        | 2     | 08 17 f4 76 78 00        | 50                   | Flex
18        | 3     | fc cf 62 9d 67 00        | 18                   | G8264_2
64        | 4     | 08 17 f4 76 78 00        | 51                   | Flex

G8264_2#sh lldp remote-device
LLDP Remote Devices Information

LocalPort | Index | Remote Chassis ID         | Remote Port          | Remote System Name
----------|-------|--------------------------|----------------------|-------------------------------
17        | 1     | 08 17 f4 32 bb 00        | 17                   | G8264_1
63        | 2     | 08 17 f4 76 78 00        | 49                   | Flex
18        | 3     | 08 17 f4 32 bb 00        | 18                   | G8264_1
64        | 4     | 08 17 f4 76 78 00        | 52                   | Flex
```

3.4.2 Verifying trunks

To verify which VLANs are active on which trunk, we used the **show interface trunk** command on the switches, as shown in Example 3-19.

Example 3-19 Show interface trunk command

```
Flex#sh interface trunk
Alias   Port Tag RMON Lrn Fld PVID       NAME                 VLAN(s)
------- ---- --- ---- --- --- ----- -------------- -------------------------------
EXT21   49    y   d    e   e    10  TO_G8264_2_Port63 10 20 30 40
EXT22   50    y   d    e   e    10  TO_G8264_1_Port63 10 20 30 40
EXT23   51    y   d    e   e    10  TO_G8264_1_Port64 10 20 30 40
EXT24   52    y   d    e   e    10  TO_G8264_2_Port64 10 20 30 40

* = PVID is tagged.

G8264_1#sh interface trunk
Alias   Port Tag RMON Lrn Fld PVID       NAME                 VLAN(s)
------- ---- --- ---- --- --- ----- -------------- -------------------------------
16      16    n   d    e   e     1                1
17      17    y   d    e   e    10  CrossLink      10 20 30 40
18      18    y   d    e   e    10  CrossLink      10 20 30 40
63      63    y   d    e   e    10  UPLINK_TO_FLEX 10 20 30 40
64      64    y   d    e   e    10  UPLINK_TO_FLEX 10 20 30 40

* = PVID is tagged.

G8264_2#sh interface trunk
Alias   Port Tag RMON Lrn Fld PVID       NAME                 VLAN(s)
------- ---- --- ---- --- --- ----- -------------- -------------------------------
17      17    y   d    e   e    10  CrossLink      10 20 30 40
18      18    y   d    e   e    10  CrossLink      10 20 30 40
63      63    y   d    e   e    10  UPLINK_TO_FLEX 10 20 30 40
64      64    y   d    e   e    10  UPLINK_TO_FLEX 10 20 30 40

* = PVID is tagged.
```

3.4.3 Verifying link aggregation by using lacp

We verified the link aggregation configuration of the switches by executing the **show lacp information** command, as shown in Example 3-20.

Example 3-20 Show lacp information command

```
Flex#sh lacp info
port    mode    adminkey  operkey  selected   prio  aggr  trunk  status  minlinks
--------------------------------------------------------------------------------
EXT21   active       121      121    yes     32768    49     53    up        1
EXT22   active       122      122    yes     32768    50     54    up        1
EXT23   active       122      122    yes     32768    50     54    up        1
EXT24   active       121      121    yes     32768    49     53    up        1

G8264_1#sh lacp information
port    mode    adminkey  operkey  selected   prio  aggr  trunk  status  minlinks
--------------------------------------------------------------------------------
17      active       117      117    yes     32768    17     65    up        1
18      active       117      117    yes     32768    17     65    up        1
63      active       163      163    yes     32768    63     66    up        1
64      active       163      163    yes     32768    63     66    up        1

G8264_2#sh lacp information
port    mode    adminkey  operkey  selected   prio  aggr  trunk  status  minlinks
--------------------------------------------------------------------------------
17      active       117      117    yes     32768    17     65    up        1
18      active       117      117    yes     32768    17     65    up        1
63      active       163      163    yes     32768    63     66    up        1
64      active       163      163    yes     32768    63     66    up        1
```

3.4.4 Verifying MST spanning tree configuration

In the next step, we verified the MST spanning tree configuration of the switches by executing the **show spanning-tree** command. As shown in Figure 3-5 on page 47 and Figure 3-6 on page 48, we have two spanning trees, one for even VLANs and one for odd VLANs. By using the show spanning tree command, you can verify the status of the respective Ethernet interface's VLAN, port state, and port role.

The commands that were run on the three switches produced the following outputs:

- EN2029: Example 3-21 on page 52
- G8264 switch 1: Example 3-22 on page 53
- G8264 switch 2: Example 3-23 on page 54

Example 3-21 Verifying the MST spanning tree configuration: Flex System switch

```
Flex#sh spanning-tree
-----------------------------------------------------------------
Pvst+ compatibility mode enabled

Mstp Digest: 0xe821ccee7501115289b37c79a72e07c9

-----------------------------------------------------------------
Spanning Tree Group 1: On (MSTP)
VLANs MAPPED:  10 30
VLANs:  10 30

Current Root:            Path-Cost  Port
 6000 08:17:f4:32:bb:00      990   EXT22

Parameters:  Priority  Aging   Topology Change Counts
              61440     300                  4

    Port      Prio    Cost    State  Role Designated Bridge      Des Port    Type
------------- ---- ---------- -----  ---- ---------------------- -------- ----------
EXT4           128     20000!  FWD   DESG f000-08:17:f4:76:78:00     8020        P2P
EXT21 (pc53)   128       990!+ DISC  ALTN 7000-fc:cf:62:9d:67:00     8083        P2P
EXT22 (pc54)   128       990!+ FWD   ROOT 6000-08:17:f4:32:bb:00     8083        P2P
EXT23 (pc54)   128       990!+ FWD   ROOT 6000-08:17:f4:32:bb:00     8083        P2P
EXT24 (pc53)   128       990!+ DISC  ALTN 7000-fc:cf:62:9d:67:00     8083        P2P
! = Automatic path cost.
+ = Portchannel cost, not the individual port cost.

-----------------------------------------------------------------
Spanning Tree Group 2: On (MSTP)
VLANs MAPPED:  20 40
VLANs:  20 40

Current Root:            Path-Cost  Port
 6000 fc:cf:62:9d:67:00      990   EXT21

Parameters:  Priority  Aging   Topology Change Counts
              61440     300                  6

    Port      Prio    Cost    State  Role Designated Bridge      Des Port    Type
------------- ---- ---------- -----  ---- ---------------------- -------- ----------
EXT4           128     20000!  FWD   DESG f000-08:17:f4:76:78:00     8020        P2P
EXT21 (pc53)   128       990!+ FWD   ROOT 6000-fc:cf:62:9d:67:00     8083        P2P
EXT22 (pc54)   128       990!+ DISC  ALTN 7000-08:17:f4:32:bb:00     8083        P2P
EXT23 (pc54)   128       990!+ DISC  ALTN 7000-08:17:f4:32:bb:00     8083        P2P
EXT24 (pc53)   128       990!+ FWD   ROOT 6000-fc:cf:62:9d:67:00     8083        P2P
! = Automatic path cost.
+ = Portchannel cost, not the individual port cost.
```

Example 3-22 Verifying the MST spanning tree configuration: G8264 switch 1

```
G8264_1(config)#sh spanning-tree
-------------------------------------------------------------------
Pvst+ compatibility mode enabled

Mstp Digest: 0xe821ccee7501115289b37c79a72e07c9

-------------------------------------------------------------------
Spanning Tree Group 1: On (MSTP)
VLANs MAPPED:  10 30
VLANs:  10 30

Current Root:            Path-Cost  Port
 6000 08:17:f4:32:bb:00        0       0

Parameters:  Priority  Aging   Topology Change Counts
              24576     300                  8

    Port      Prio    Cost    State  Role Designated Bridge      Des Port    Type
------------- ---- ---------- -----  ---- ---------------------- -------- ----------
17    (pc65)   128       990!+ FWD   DESG 6000-08:17:f4:32:bb:00     8082        P2P
18    (pc65)   128       990!+ FWD   DESG 6000-08:17:f4:32:bb:00     8082        P2P
63    (pc66)   128       990!+ FWD   DESG 6000-08:17:f4:32:bb:00     8083        P2P
64    (pc66)   128       990!+ FWD   DESG 6000-08:17:f4:32:bb:00     8083        P2P
! = Automatic path cost.
+ = Portchannel cost, not the individual port cost.

-------------------------------------------------------------------
Spanning Tree Group 2: On (MSTP)
VLANs MAPPED:  20 40
VLANs:  20 40

Current Root:            Path-Cost  Port
 6000 fc:cf:62:9d:67:00      990      17

Parameters:  Priority  Aging   Topology Change Counts
              28672     300                  8Press q to quit, any other key to

    Port      Prio    Cost    State  Role Designated Bridge      Des Port    Type
------------- ---- ---------- -----  ---- ---------------------- -------- ----------
17    (pc65)   128       990!+ FWD   ROOT 6000-fc:cf:62:9d:67:00     8082        P2P
18    (pc65)   128       990!+ FWD   ROOT 6000-fc:cf:62:9d:67:00     8082        P2P
63    (pc66)   128       990!+ FWD   DESG 7000-08:17:f4:32:bb:00     8083        P2P
64    (pc66)   128       990!+ FWD   DESG 7000-08:17:f4:32:bb:00     8083        P2P
! = Automatic path cost.
+ = Portchannel cost, not the individual port cost.
```

Example 3-23 Verifying the MST spanning tree configuration: G8264 switch 2

```
G8264_2(config)#sh spanning-tree
-------------------------------------------------------------------
Pvst+ compatibility mode enabled

Mstp Digest: 0xe821ccee7501115289b37c79a72e07c9

-------------------------------------------------------------------
Spanning Tree Group 1: On (MSTP)
VLANs MAPPED:  10 30
VLANs:  10 30

Current Root:            Path-Cost  Port
 6000 08:17:f4:32:bb:00      990      17

Parameters:  Priority  Aging   Topology Change Counts
              28672     300                  2

    Port      Prio    Cost    State  Role Designated Bridge      Des Port    Type
------------- ---- ---------- -----  ---- ---------------------- -------- ----------
17    (pc65)   128       990!+ FWD   ROOT 6000-08:17:f4:32:bb:00     8082        P2P
18    (pc65)   128       990!+ FWD   ROOT 6000-08:17:f4:32:bb:00     8082        P2P
63    (pc66)   128       990!+ FWD   DESG 7000-fc:cf:62:9d:67:00     8083        P2P
64    (pc66)   128       990!+ FWD   DESG 7000-fc:cf:62:9d:67:00     8083        P2P
! = Automatic path cost.
+ = Portchannel cost, not the individual port cost.

-------------------------------------------------------------------
Spanning Tree Group 2: On (MSTP)
VLANs MAPPED:  20 40
VLANs:  20 40

Current Root:            Path-Cost  Port
 6000 fc:cf:62:9d:67:00        0       0

Parameters:  Priority  Aging   Topology Change Counts
              24576     300                  6Press q to quit, any other key to

    Port      Prio    Cost    State  Role Designated Bridge      Des Port    Type
------------- ---- ---------- -----  ---- ---------------------- -------- ----------
17    (pc65)   128       990!+ FWD   DESG 6000-fc:cf:62:9d:67:00     8082        P2P
18    (pc65)   128       990!+ FWD   DESG 6000-fc:cf:62:9d:67:00     8082        P2P
63    (pc66)   128       990!+ FWD   DESG 6000-fc:cf:62:9d:67:00     8083        P2P
64    (pc66)   128       990!+ FWD   DESG 6000-fc:cf:62:9d:67:00     8083        P2P
! = Automatic path cost.
+ = Portchannel cost, not the individual port cost.
```

3.4.5 Show running-config of all switches in Use Case 3

In the configuration output of the switches that is shown in Example 3-24, you can see the necessary configuration steps that we performed during our test. Important parameters and detail are highlighted in red.

The commands that were run on the three switches produced the following outputs:

- EN2029: Example 3-24
- G8264 switch 1: Example 3-25 on page 57
- G8264 switch 2: Example 3-26 on page 58

Example 3-24 Output of the show running command: EN2092 switch

```
Flex#sh run
Current configuration:
!
version "7.2.2.2"
switch-type "IBM Flex System EN2092 1Gb Ethernet Scalable Switch"
!
hostname "Flex"
!
interface port INTA2
        tagging
        exit
!
interface port INTA7
        shutdown
        exit
!
interface port EXT4
        name "TEST_PC"
        tagging
        exit
!
interface port EXT21
        name "TO_G8264_2_Port63"
        tagging
        pvid 10
        exit
!
interface port EXT22
        name "TO_G8264_1_Port63"
        tagging
        pvid 10
        exit
!
interface port EXT23
        name "TO_G8264_1_Port64"
        tagging
        pvid 10
        exit
!
interface port EXT24
        name "TO_G8264_2_Port64"
        tagging
        pvid 10
        exit
!
vlan 1
```

```
        member INTA1-EXT20
        no member EXT21-EXT24
!
vlan 10
        enable
        name "Server"
        member EXT4,EXT21-EXT24
!
vlan 20
        enable
        name "Data20"
        member EXT4,EXT21-EXT24
!
vlan 30
        enable
        name "Data30"
        member EXT4,EXT21-EXT24
!
vlan 40
        enable
        name "Data40"
        member EXT4,EXT21-EXT24
!
spanning-tree mstp version 10
spanning-tree mstp name "PureFlex"
spanning-tree mode mst
spanning-tree mstp cist-add-vlan 1
spanning-tree mstp cist-add-vlan 4095
!
spanning-tree stp 1 vlan 10
spanning-tree stp 1 vlan 30

spanning-tree stp 2 vlan 20
spanning-tree stp 2 vlan 40


!
interface port EXT21
        lacp mode active
        lacp key 121
!
interface port EXT22
        lacp mode active
        lacp key 122
!
interface port EXT23
        lacp mode active
        lacp key 122
!
interface port EXT24
        lacp mode active
        lacp key 121
!
lldp enable
!
End
```

Example 3-25 Output of the show running command: G8264 switch 1

```
G8264_1#sh run
Current configuration:
!
version "7.2.2"
switch-type "IBM Networking Operating System RackSwitch G8264"
!
hostname "G8264_1"
!
!
interface port 17
        name "CrossLink"
        tagging
        pvid 10
        exit
!
interface port 18
        name "CrossLink"
        tagging
        pvid 10
        exit
!
interface port 63
        name "UPLINK_TO_FLEX"
        tagging
        pvid 10
        exit
!
interface port 64
        name "UPLINK_TO_FLEX"
        tagging
        pvid 10
        exit
!
vlan 1
        member 1-16,19-62
        no member 17-18,63-64
!
vlan 10
        enable
        name "none"
        member 17-18,63-64
!
vlan 20
        enable
        name "none"
        member 17-18,63-64
!
vlan 30
        enable
        name "none"
        member 17-18,63-64
!
vlan 40
        enable
        name "VLAN 40"
        member 17-18,63-64
!
spanning-tree mstp version 10
spanning-tree mstp name "PureFlex"
```

```
spanning-tree mode mst
spanning-tree mstp cist-add-vlan 1
spanning-tree mstp cist-add-vlan 4095
!
spanning-tree stp 1 bridge priority 24576
spanning-tree stp 1 vlan 10
spanning-tree stp 1 vlan 30

spanning-tree stp 2 bridge priority 28672
spanning-tree stp 2 vlan 20
spanning-tree stp 2 vlan 40

spanning-tree stp 40 bridge priority 28672

!
interface port 17
        lacp mode active
        lacp key 117
!
interface port 18
        lacp mode active
        lacp key 117
!
interface port 63
        lacp mode active
        lacp key 163
!
interface port 64
        lacp mode active
        lacp key 163
!
lldp enable
!
end
```

Example 3-26 Output of the show running command: G8264 switch 2

```
G8264_2#sh run

Current configuration:
!
version "7.2.2"
switch-type "IBM Networking Operating System RackSwitch G8264"
!
hostname "G8264_2"
!
interface port 17
        name "CrossLink"
        tagging
        pvid 10
        exit
!
interface port 18
        name "CrossLink"
        tagging
        pvid 10
        exit
!
```

```
interface port 63
        name "UPLINK_TO_FLEX"
        tagging
        pvid 10
        exit
!
interface port 64
        name "UPLINK_TO_FLEX"
        tagging
        pvid 10
        exit
!
vlan 1
        member 1-16,19-62
        no member 17-18,63-64
!
vlan 10
        enable
        name "none"
        member 17-18,63-64
!
vlan 20
        enable
        name "none"
        member 17-18,63-64
!
vlan 30
        enable
        name "none"
        member 17-18,63-64
!
vlan 40
        enable
        name "VLAN 40"
        member 17-18,63-64
!
spanning-tree mstp version 10
spanning-tree mstp name "PureFlex"
spanning-tree mode mst
spanning-tree mstp cist-add-vlan 1
spanning-tree mstp cist-add-vlan 4095
!
spanning-tree stp 1 bridge priority 28672
spanning-tree stp 1 vlan 10
spanning-tree stp 1 vlan 30

spanning-tree stp 2 bridge priority 24576
spanning-tree stp 2 vlan 20
spanning-tree stp 2 vlan 40


!
interface port 17
        lacp mode active
        lacp key 117
!
interface port 18
        lacp mode active
        lacp key 117
!
```

```
interface port 63
        lacp mode active
        lacp key 163
!
interface port 64
        lacp mode active
        lacp key 163
!
lldp enable
!
end
```

3.5 Use Case 4: Link aggregation, MSTP and VLAG

The concept of virtual link aggregation (VLAG) shows the pair of G8264 switches logically as one switch entity. Together with LACP, this configuration allows the typical *triangle design* to be run, as shown in Figure 3-7.

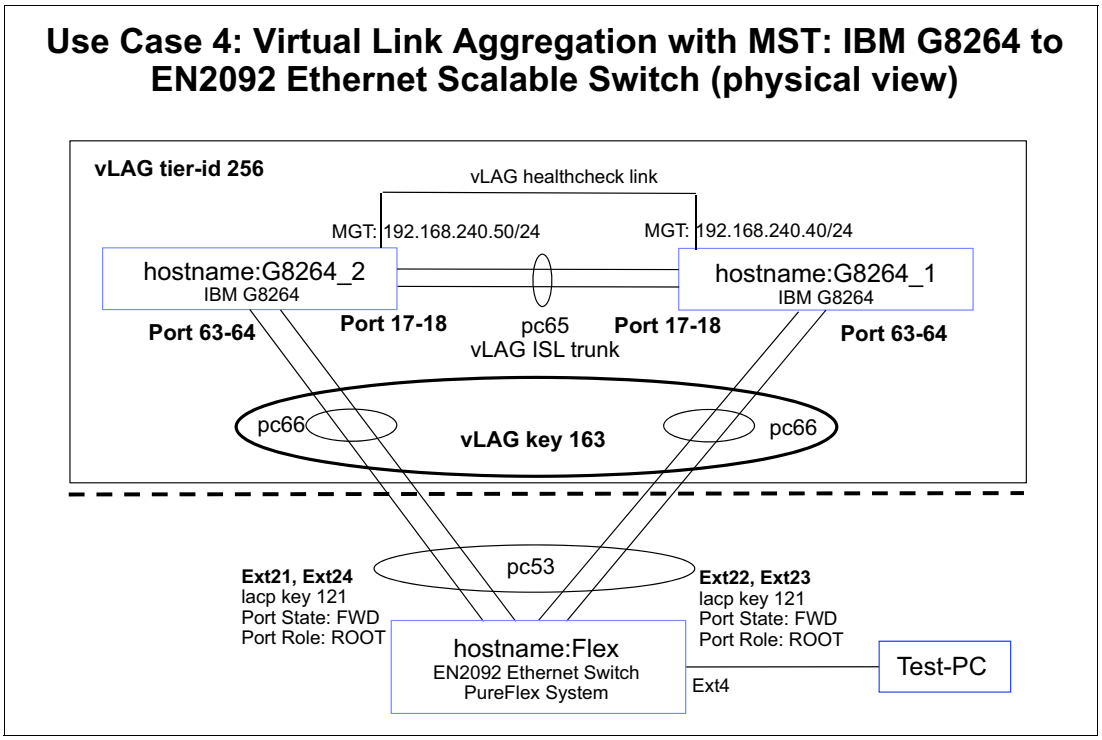

Figure 3-7 VLAG with MST

Figure 3-8 on page 61 shows the logical view of the setup. To the IBM Flex Switch, the pair of IBM RackSwitch G8264 switches looks like one switch.

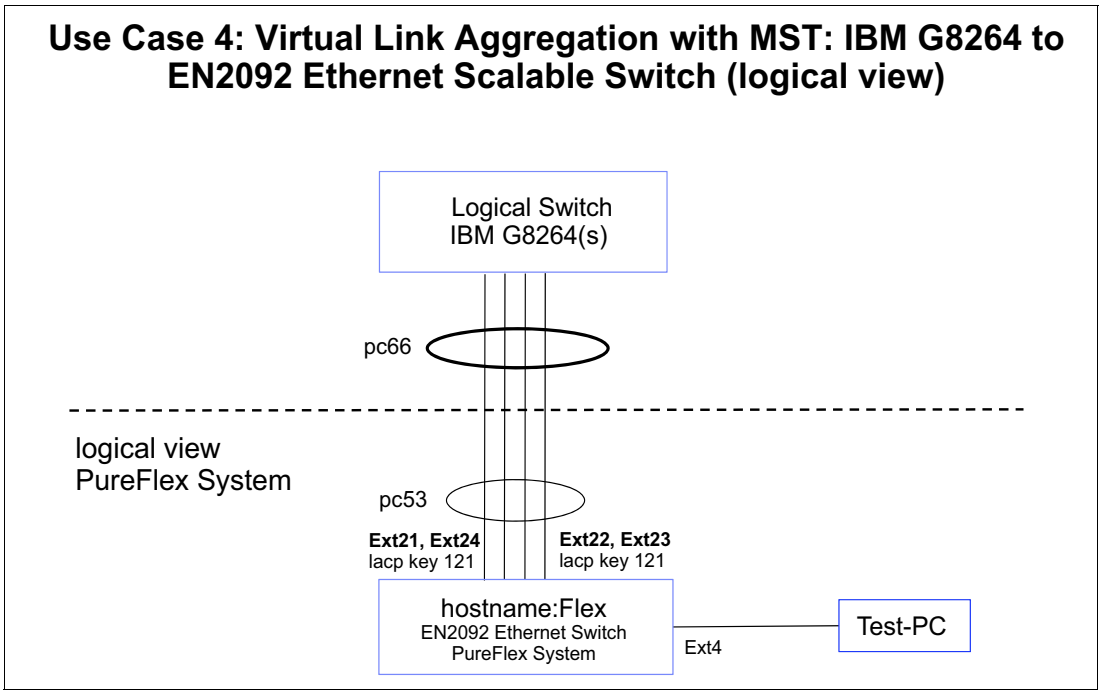

Figure 3-8 VLAG with MST (logical view)

3.5.1 Verifying the topology by using lldp

To verify the topology, we used the **show lldp remote-device** command on the switches, as shown in Example 3-27.

Example 3-27 Verifying the topology by using lldp

```
G8264_1#show lldp remote-device
LLDP Remote Devices Information

LocalPort | Index | Remote Chassis ID         | Remote Port          | Remote System Name
----------|-------|--------------------------|----------------------|--------------------
17        | 1     | fc cf 62 9d 67 00        | 17                   | G8264_2
63        | 2     | 08 17 f4 76 78 00        | 50                   | Flex
18        | 3     | fc cf 62 9d 67 00        | 18                   | G8264_2
64        | 4     | 08 17 f4 76 78 00        | 51                   | Flex

G8264_2#sh lldp remote-device
LLDP Remote Devices Information

LocalPort | Index | Remote Chassis ID         | Remote Port          | Remote System Name
----------|-------|--------------------------|----------------------|------------------
17        | 1     | 08 17 f4 32 bb 00        | 17                   | G8264_1
63        | 2     | 08 17 f4 76 78 00        | 49                   | Flex
18        | 3     | 08 17 f4 32 bb 00        | 18                   | G8264_1
64        | 4     | 08 17 f4 76 78 00        | 52                   | Flex

Flex#sh lldp remote-device
LLDP Remote Devices Information

LocalPort | Index | Remote Chassis ID         | Remote Port          | Remote System Name
----------|-------|--------------------------|----------------------|-------------------
EXT22     | 1     | 08 17 f4 32 bb 00        | 63                   | G8264_1
EXT21     | 2     | fc cf 62 9d 67 00        | 63                   | G8264_2
INTA1     | 3     | 5c f3 fc 5f 43 9d        | 5c-f3-fc-5f-43-9d    |
INTA4     | 4     | 5c f3 fc 6e 23 41        | 5c-f3-fc-6e-23-41    |
EXT23     | 5     | 08 17 f4 32 bb 00        | 64                   | G8264_1
EXT5      | 6     | 00 0d ec a3 8f 81        | mgmt0                | vie
EXT7      | 7     | 00 05 9b 7b 84 01        | mgmt0                | str
EXT24     | 8     | fc cf 62 9d 67 00        | 64                   | G8264_2
```

3.5.2 Verify interface status

To verify the interface, we used the **show interface status** command on the switches, as shown in Example 3-28.

Example 3-28 Verify interface status

```
G8264_1#sh interface st
-------------------------------------------------------------------
Alias   Port   Speed    Duplex     Flow Ctrl      Link       Name
------- ----   -----   --------  --TX-----RX--   ------     ------
1       1      10000     full      no     no      down      1
--
16      16     10000     full      no     no      down      16
17      17     10000     full      no     no       up       CrossLink
18      18     10000     full      no     no       up       CrossLink
19      19     1G/10G    full      no     no      down      19
--
```

```
62        62     1G/10G    full      no     no      down      62
63        63     10000     full      no     no       up       UPLINK_TO_FLEX
64        64     10000     full      no     no       up       UPLINK_TO_FLEX
MGT       65      1000     full     yes    yes       up       MGT

G8264_2#sh interface status
-------------------------------------------------------------------
Alias   Port   Speed    Duplex     Flow Ctrl      Link       Name
------- ----   -----   --------  --TX-----RX--   ------     ------
1        1      40000     full      no     no      down      1
--
16       16     10000     full      no     no      down      16
17       17     10000     full      no     no       up       CrossLink
18       18     10000     full      no     no       up       CrossLink
19       19     1G/10G    full      no     no      down      19
--
62       62     1G/10G    full      no     no      down      62
63       63     10000     full      no     no       up       UPLINK_TO_FLEX
64       64     10000     full      no     no       up       UPLINK_TO_FLEX
MGT      65      1000     full     yes    yes       up       MGT

Flex#show interface status
-------------------------------------------------------------------
Alias   Port   Speed    Duplex     Flow Ctrl      Link       Name
------- ----   -----   --------  --TX-----RX--   ------     ------
INTA1    1       1000     full     yes    yes       up       INTA1
INTA2    2       1000     full     yes    yes       up       INTA2
INTA3    3       1000     full     yes    yes      down      INTA3
INTA4    4       1000     full     yes    yes       up       INTA4
INTA5    5       1000     full     yes    yes      down      INTA5
INTA6    6       1000     full     yes    yes      down      INTA6
INTA7    7       1000     full     yes    yes    disabled    INTA7
INTA8    8       1000     full     yes    yes      down      INTA8
INTA9    9       1000     full     yes    yes      down      INTA9
INTA10   10      1000     full     yes    yes      down      INTA10
INTA11   11      1000     full     yes    yes      down      INTA11
INTA12   12      1000     full     yes    yes      down      INTA12
INTA13   13      1000     full     yes    yes      down      INTA13
INTA14   14      1000     full     yes    yes      down      INTA14
INTB1    15      1000     full     yes    yes      down      INTB1
--
INTB14   28      1000     full     yes    yes      down      INTB14
EXT1     29      1000     full      no     no       up       EXT1
EXT2     30      1000     full      no     no       up       EXT2
EXT3     31      1000     full      no     no       up       EXT3
EXT4     32      1000     full      no     no       up       TEST_PC
EXT5     33      1000     full      no     no       up       EXT5
--
EXT20    48       any      any      no     no      down      EXT20
EXT21    49     10000     full      no     no       up       TO_G8264_2_Port63
EXT22    50     10000     full      no     no       up       TO_G8264_1_Port63
EXT23    51     10000     full      no     no       up       TO_G8264_1_Port64
EXT24    52     10000     full      no     no       up       TO_G8264_2_Port64
MGT1     53      1000     full      no     no       up       MGT1
```

3.5.3 Verifying trunks

To verify which VLANs are active on which trunk, we used the **show interface trunk** command on the switches, as shown in Example 3-29.

Example 3-29 Verifying trunks

```
G8264_1#sh interface trunk
Alias   Port Tag RMON Lrn Fld PVID       NAME                 VLAN(s)
------- ---- --- ---- --- --- ----- -------------- -------------------------------
1       1     n   d    e   e     1                1
--
16      16    n   d    e   e     1                1
17      17    y   d    d   e  4094  CrossLink      10 20 30 40 4094
18      18    y   d    d   e  4094  CrossLink      10 20 30 40 4094
19      19    n   d    e   e     1                1
--
62      62    n   d    e   e     1                1
63      63    y   d    e   e    10  UPLINK_TO_FLEX 10 20 30 40
64      64    y   d    e   e    10  UPLINK_TO_FLEX 10 20 30 40
MGT     65    n   d    e   e  4095                4095

G8264_2#sh interface trunk
Alias   Port Tag RMON Lrn Fld PVID       NAME                 VLAN(s)
------- ---- --- ---- --- --- ----- -------------- -------------------------------
1       1     n   d    e   e     1                1
--
16      16    n   d    e   e     1                1
17      17    y   d    d   e  4094  CrossLink      10 20 30 40 4094
18      18    y   d    d   e  4094  CrossLink      10 20 30 40 4094
19      19    n   d    e   e     1                1
--
62      62    n   d    e   e     1                1
63      63    y   d    e   e    10  UPLINK_TO_FLEX 10 20 30 40
64      64    y   d    e   e    10  UPLINK_TO_FLEX 10 20 30 40
MGT     65    n   d    e   e  4095                4095

Flex#sh interface trunk
Alias   Port Tag RMON Lrn Fld PVID       NAME                 VLAN(s)
------- ---- --- ---- --- --- ----- -------------- -------------------------------
INTA1   1     n   d    e   e     1  INTA1          1
INTA2   2     y   d    e   e     1  INTA2          1
INTA3   3     n   d    e   e     1  INTA3          1
INTA4   4     n   d    e   e     1  INTA4          1
INTA5   5     n   d    e   e     1  INTA5          1
INTA6   6     n   d    e   e     1  INTA6          1
INTA7   7     n   d    e   e     1  INTA7          1
INTA8   8     n   d    e   e     1  INTA8          1
INTA9   9     n   d    e   e     1  INTA9          1
INTA10  10    n   d    e   e     1  INTA10         1
INTA11  11    n   d    e   e     1  INTA11         1
INTA12  12    n   d    e   e     1  INTA12         1
INTA13  13    n   d    e   e     1  INTA13         1
INTA14  14    n   d    e   e     1  INTA14         1
INTB1   15    n   d    e   e     1  INTB1          1
--
INTB14  28    n   d    e   e     1  INTB14         1
EXT1    29    n   d    e   e     1  EXT1           1
EXT2    30    n   d    e   e     1  EXT2           1
EXT3    31    n   d    e   e     1  EXT3           1
```

```
EXT4    32    y   d    e   e     1  TEST_PC        1 10 20 30 40
EXT5    33    n   d    e   e     1  EXT5           1
--
EXT20   48    n   d    e   e     1  EXT20          1
EXT21   49    y   d    e   e    10  TO_G8264_2_Port63 10 20 30 40
EXT22   50    y   d    e   e    10  TO_G8264_1_Port63 10 20 30 40
EXT23   51    y   d    e   e    10  TO_G8264_1_Port64 10 20 30 40
EXT24   52    y   d    e   e    10  TO_G8264_2_Port64 10 20 30 40
MGT1    53    y   d    e   e  4095  MGT1           4095
```

3.5.4 Verify spanning tree

We verified the spanning tree configuration of the switches by executing the **show spanning-tree** command, as shown in Example 3-30.

Example 3-30 Verify spanning tree

```
G8264_1#sh spanning-tree
-----------------------------------------------------------------
Pvst+ compatibility mode enabled

Mstp Digest: 0xe821ccee7501115289b37c79a72e07c9

-----------------------------------------------------------------
Spanning Tree Group 1: On (MSTP)
VLANs MAPPED:  10 30
VLANs:  10 30

Current Root:            Path-Cost  Port
 6000 08:17:f4:32:bb:00        0       0

Parameters:  Priority  Aging   Topology Change Counts
              24576     300                 20

    Port      Prio    Cost    State  Role Designated Bridge      Des Port    Type
------------- ---- ---------- -----  ---- ---------------------- -------- ----------
17    (pc65)   128       990!+ FWD   DESG 6000-08:17:f4:32:bb:00     8082        P2P
18    (pc65)   128       990!+ FWD   DESG 6000-08:17:f4:32:bb:00     8082        P2P
63    (pc66)   128       200!+ FWD   DESG 6000-08:17:f4:32:bb:00     8102        P2P
64    (pc66)   128       200!+ FWD   DESG 6000-08:17:f4:32:bb:00     8102        P2P
! = Automatic path cost.
+ = Portchannel cost, not the individual port cost.

-----------------------------------------------------------------
Spanning Tree Group 2: On (MSTP)
VLANs MAPPED:  20 40
VLANs:  20 40

Current Root:            Path-Cost  Port
 6000 fc:cf:62:9d:67:00      990      17

Parameters:  Priority  Aging   Topology Change Counts
              28672     300                 19

    Port      Prio    Cost    State  Role Designated Bridge      Des Port    Type
------------- ---- ---------- -----  ---- ---------------------- -------- ----------
17    (pc65)   128       990!+ FWD   ROOT 6000-fc:cf:62:9d:67:00     8082        P2P
18    (pc65)   128       990!+ FWD   ROOT 6000-fc:cf:62:9d:67:00     8082        P2P
63    (pc66)   128       200!+ FWD   DESG 7000-08:17:f4:32:bb:00     8102        P2P
```

```
64    (pc66)   128       200!+ FWD   DESG 7000-08:17:f4:32:bb:00     8102        P2P
! = Automatic path cost.
+ = Portchannel cost, not the individual port cost.

----------------------------------------------------------------
Spanning Tree Group 32: Off (MSTP), FDB aging timer 300
VLANs MAPPED:  4094
VLANs:  4094

    Port      Prio    Cost    State  Role Designated Bridge      Des Port    Type
------------- ---- ---------- -----  ---- ---------------------- -------- ----------
17    (pc65)     0         0   FWD *
18    (pc65)     0         0   FWD *
* = STP turned off for this port.
```

3.5.5 Verify virtual link aggregation

We verified the link aggregation configuration of the switches by executing various **show** commands, as shown in Example 3-31.

Example 3-31 Verify virtual link aggregation

```
G8264_1#show lacp information
port    mode    adminkey  operkey  selected   prio  aggr  trunk  status  minlinks
--------------------------------------------------------------------------------
1       off            1        1     no     32768    --     --    --        1
--
16      off           16       16     no     32768    --     --    --        1
17      active       117      117    yes     32768    17     65    up        1
18      active       117      117    yes     32768    17     65    up        1
19      off           19       19     no     32768    --     --    --        1
--
62      off           62       62     no     32768    --     --    --        1
63      active       163      163    yes     32768    63     66    up        1
64      active       163      163    yes     32768    63     66    up        1

G8264_1#sh lacp aggregator 63
Aggregator Id  63
----------------------------------------------
Aggregator MAC address  - 08:17:f4:32:bb:a0
Actor System Priority   - 32768
Actor System ID         - 08:17:f4:c3:dd:ff
Individual              - FALSE
Actor Oper Key          - 163
Partner System Priority - 32768
Partner System ID       - 08:17:f4:76:78:00
Partner Oper Key        - 121
ready                   - TRUE
Min-Links               - 1
Number of Ports in aggr - 2
index  0    port 63
index  1    port 64

G8264_1#show vlag adminkey 163
vLAG is enabled on admin key 163
Current LACP params for 63:  active, Priority 32768, Admin Key 163, Min-Links 1

Current LACP params for 64:  active, Priority 32768, Admin Key 163, Min-Links 1
```

```
G8264_1#show vlag information
vLAG Tier ID: 256
vLAG system MAC: 08:17:f4:c3:dd:ff
Local MAC 08:17:f4:32:bb:00 Priority 0 Admin Role PRIMARY (Operational Role PRIMARY)
Peer MAC fc:cf:62:9d:67:00 Priority 0
Health local 192.168.240.40 peer 192.168.240.50 State UP
ISL trunk id 65
ISL state    Up
Startup Delay Interval: 120s (Finished)

vLAG 65: config with admin key 163, associated trunk 66, state formed

G8264_1#show vlag isl
ISL_ID   ISL_Vlan     ISL_Trunk        ISL_Members    Link_State    Trunk_State

65         4094      Adminkey 117          17           UP             UP
                                           18           UP             UP

G8264_1#show vlag statistics

vLAG PDU sent:
Role Election:        2         System Info:           1
Peer Instance Enable: 2         Peer Instance Disable: 0
FDB Dynamic Add:      4         FDB Dynamic Del:       4
FDB Inactive Add:     0         FDB Inactive Del:      0
Health Check:         384       ISL Hello:             31
Other:                0         Unknown:               0


vLAG PDU received:
Role Election:        2         System Info:           1
Peer Instance Enable: 2         Peer Instance Disable: 0
FDB Dynamic Add:      4         FDB Dynamic Del:       4
FDB Inactive Add:     0         FDB Inactive Del:      0
Health Check:         382       ISL Hello:             1
Other:                0         Unknown:               0


vLAG IGMP packets forwarded:
IGMP Reports:         0
IGMP Leaves:          0

G8264_2#sh lacp information
port    mode    adminkey  operkey  selected   prio  aggr  trunk  status  minlinks
--------------------------------------------------------------------------------
1       off            1        1     no     32768    --     --    --        1
--
16      off           16       16     no     32768    --     --    --        1
17      active       117      117    yes     32768    17     65    up        1
18      active       117      117    yes     32768    17     65    up        1
19      off           19       19     no     32768    --     --    --        1
--
62      off           62       62     no     32768    --     --    --        1
63      active       163      163    yes     32768    64     66    up        1
64      active       163      163    yes     32768    64     66    up        1

G8264_2#show lacp aggregator 64
Aggregator Id  64
----------------------------------------------
Aggregator MAC address  - fc:cf:62:9d:67:a0
```

```
Actor System Priority   - 32768
Actor System ID         - 08:17:f4:c3:dd:ff
Individual              - FALSE
Actor Oper Key          - 163
Partner System Priority - 32768
Partner System ID       - 08:17:f4:76:78:00
Partner Oper Key        - 121
ready                   - TRUE
Min-Links               - 1
Number of Ports in aggr - 2
index  0    port 63
index  1    port 64

G8264_2#sh vlag information
vLAG Tier ID: 256
vLAG system MAC: 08:17:f4:c3:dd:ff
Local MAC fc:cf:62:9d:67:00 Priority 0 Admin Role SECONDARY (Operational Role SECONDARY)
Peer MAC 08:17:f4:32:bb:00 Priority 0
Health local 192.168.240.50 peer 192.168.240.40 State UP
ISL trunk id 65
ISL state    Up
Startup Delay Interval: 120s (Finished)

vLAG 65: config with admin key 163, associated trunk 66, state formed

G8264_2#sh vlag adminkey 163
vLAG is enabled on admin key 163
Current LACP params for 63:  active, Priority 32768, Admin Key 163, Min-Links 1

Current LACP params for 64:  active, Priority 32768, Admin Key 163, Min-Links 1

G8264_2#sh vlag isl
ISL_ID   ISL_Vlan     ISL_Trunk        ISL_Members    Link_State    Trunk_State

65         4094      Adminkey 117          17           UP             UP
                                           18           UP             UP

G8264_2#sh vlag statistics

vLAG PDU sent:
Role Election:        2         System Info:           1
Peer Instance Enable: 2         Peer Instance Disable: 0
FDB Dynamic Add:      4         FDB Dynamic Del:       4
FDB Inactive Add:     0         FDB Inactive Del:      0
Health Check:         530       ISL Hello:             2
Other:                0         Unknown:               0


vLAG PDU received:
Role Election:        2         System Info:           1
Peer Instance Enable: 2         Peer Instance Disable: 0
FDB Dynamic Add:      4         FDB Dynamic Del:       4
FDB Inactive Add:     0         FDB Inactive Del:      0
Health Check:         529       ISL Hello:             31
Other:                0         Unknown:               0


vLAG IGMP packets forwarded:
IGMP Reports:         0
IGMP Leaves:          0
```

```
Flex#sh lacp information
port    mode    adminkey  operkey  selected   prio  aggr  trunk  status  minlinks
--------------------------------------------------------------------------------
INTA1   off            1        1     no     32768    --     --    --        1
--
INTB14  off           28       28     no     32768    --     --    --        1
EXT1    off           29       29     no     32768    --     --    --        1
--
EXT20   off           48       48     no     32768    --     --    --        1
EXT21   active       121      121    yes     32768    52     53    up        1
EXT22   active       121      121    yes     32768    52     53    up        1
EXT23   active       121      121    yes     32768    52     53    up        1
EXT24   active       121      121    yes     32768    52     53    up        1

Flex#sh lacp
Current LACP system ID: 08:17:f4:76:78:00
Current LACP system Priority: 32768
Current LACP timeout scale: long

Current LACP params for EXT21:  active, Priority 32768, Admin Key 121, Min-Links 1

Current LACP params for EXT22:  active, Priority 32768, Admin Key 121, Min-Links 1

Current LACP params for EXT23:  active, Priority 32768, Admin Key 121, Min-Links 1

Current LACP params for EXT24:  active, Priority 32768, Admin Key 121, Min-Links 1

Flex#sh lacp aggregator 52
Aggregator Id  52
----------------------------------------------
Aggregator MAC address  - 08:17:f4:76:78:86
Actor System Priority   - 32768
Actor System ID         - 08:17:f4:76:78:00
Individual              - FALSE
Actor Oper Key          - 121
Partner System Priority - 32768
Partner System ID       - 08:17:f4:c3:dd:ff
Partner Oper Key        - 163
ready                   - TRUE
Min-Links               - 1
Number of Ports in aggr - 4
index  0    port EXT21
index  1    port EXT22
index  2    port EXT23
index  3    port EXT24
```

The Flex switch now has one aggregated link (port channel) consisting of four connections to the logically unified pair of IBM G8264 switches. Previously, the Flex switch featured two aggregated links that consisted of two connections each to two separate IBM G8264.

The MST spanning tree is still configured. In contrast to the configurations without VLAG, all four ports now are in spanning tree status forwarding because they all belong to the same LCAP channel.

3.5.6 Show running-config of all switches in Use Case 4

The following configuration memory dumps of the three switches show the successfully tested setup. The essential parameters for this use case are highlighted in red.

The commands that were run on the three switches produced the following outputs:

- EN2029: Example 3-32
- G8264 switch 1: Example 3-33 on page 73
- G8264 switch 2: Example 3-34 on page 75

Example 3-32 Output of the show running command: EN2092 switch

```
Flex#sh run
Current configuration:
!
version "7.2.2.2"
switch-type "IBM Flex System EN2092 1Gb Ethernet Scalable Switch"
!
!

snmp-server user 4 name "DirectorServerSNMPv3User"
snmp-server user 4 authentication-protocol sha authentication-password
"602e911d40088008ac26f2f683b823fa38bbdaca61af87e7367acc3d627979a016507d179fd43edc664137aa7e
2b40f63d"
snmp-server user 4 privacy-protocol des privacy-password
"7f068e355a008a20b62ee7f699b029d28afa8626040f6b48106531c7dcf753ad33117273b4a73403720bee4701
1b065f9c"
!
snmp-server group 4 user-name DirectorServerSNMPv3User
snmp-server group 4 group-name "ibmd_grp_4"
!
snmp-server access 4 name "ibmd_grp_4"
snmp-server access 4 level authPriv
snmp-server access 4 notify-view "iso"
!
snmp-server target-address 1 name "ibmd_taddr_1" address 192.168.10.103
snmp-server target-address 1 parameters-name "ibmd_tparam_1"
!
snmp-server target-parameters 1 name "ibmd_tparam_1"
snmp-server target-parameters 1 user-name "DirectorServerSNMPv3User"
snmp-server target-parameters 1 level authPriv
!
snmp-server version v1v2v3
!
snmp-server name "Flex"
!
hostname "Flex"
system idle 60
!
!
access http enable
access telnet enable
!
interface port INTA2
        tagging
        exit
!
interface port INTA7
        shutdown
        exit
```

```
!
interface port EXT4
        name "TEST_PC"
        tagging
        exit
!
interface port EXT21
        name "TO_G8264_2_Port63"
        tagging
        pvid 10
        exit
!
interface port EXT22
        name "TO_G8264_1_Port63"
        tagging
        pvid 10
        exit
!
interface port EXT23
        name "TO_G8264_1_Port64"
        tagging
        pvid 10
        exit
!
interface port EXT24
        name "TO_G8264_2_Port64"
        tagging
        pvid 10
        exit
!
vlan 1
        member INTA1-EXT20
        no member EXT21-EXT24
!
!
vlan 10
        enable
        name "Server"
        member EXT4,EXT21-EXT24
!
!
vlan 20
        enable
        name "Data20"
        member EXT4,EXT21-EXT24
!
!
vlan 30
        enable
        name "Data30"
        member EXT4,EXT21-EXT24
!
!
vlan 40
        enable
        name "Data40"
        member EXT4,EXT21-EXT24
!
!
!
```

```
spanning-tree mstp version 10
spanning-tree mstp name "PureFlex"
spanning-tree mode mst
spanning-tree mstp cist-add-vlan 1
spanning-tree mstp cist-add-vlan 4095
!
spanning-tree stp 1 vlan 10
spanning-tree stp 1 vlan 30

spanning-tree stp 2 vlan 20
spanning-tree stp 2 vlan 40

!
interface port EXT21
        lacp mode active
        lacp key 121
!
interface port EXT22
        lacp mode active
        lacp key 121
!
interface port EXT23
        lacp mode active
        lacp key 121
!
interface port EXT24
        lacp mode active
        lacp key 121
!
!
!
!
!
!
lldp enable
!
!
!
!
!
ntp enable
ntp ipv6 primary-server fe80::211:25ff:fec3:1420 MGT
ntp interval 15
ntp authenticate
ntp primary-key 49909
!
ntp message-digest-key 103 md5-ekey
4264b3504204a200ae2df2b381b401f2d384e6827376b623d79c78c89f3b4288a2619aa3f05c0d5dc8a369a956a
81063a4203a5a34993a54288393f9264b42da
!
! SNIP
! …more lines of “ntp message-digest-key”
! SNIP
!
ntp message-digest-key 64248 md5-ekey
f42d0519500d0008bc24e6f293bda3fadbbc2899f01c55d586637020e1f9dd332028f2e1b627438abbd5bbe8350
5dc965b43752daacb2751446c122610608374
!
ntp trusted-key
103,1821,2416,3343,4617,6903,7255,9094,10386,10939,12266,12389,13261,13280,13640,14424,1641
```

```
7,17555,17944,18537,19291,19742,19776,20027,21166,21710,22141,22512,23917,25162,25988,27418
,27687,27964,28200,29005,29180,29297,29395,31615,31972,32287,32782,34183,35544,35571,37155,
37414,37968,38424,38865,38947,39752,40976,41343,41997,42080,42261,42816,42898,43020,48745,4
9909,50872,51266,54111,54278,55616,57966,61370,62043,62789,63696,63785,64175,64248
!
end
```

Example 3-33 Output of the show running command: G8264 switch 1

```
G8264_1#sh run
version "7.2.2"
switch-type "IBM Networking Operating System RackSwitch G8264"
!
!

!
!
no system dhcp
hostname "G8264_1"
system idle 60
!
!
interface port 17
        name "CrossLink"
        tagging
        pvid 4094
        exit
!
interface port 18
        name "CrossLink"
        tagging
        pvid 4094
        exit
!
interface port 63
        name "DOWNLINK_TO_FLEX"
        tagging
        pvid 10
        exit
!
interface port 64
        name "DOWNLINK_TO_FLEX"
        tagging
        pvid 10
        exit
!
vlan 1
        member 1-16,19-62
        no member 17-18,63-64
!
!
vlan 10
        enable
        name "none"
        member 17-18,63-64
!
!
vlan 20
```

```
        enable
        name "none"
        member 17-18,63-64
!
!
vlan 30
        enable
        name "none"
        member 17-18,63-64
!
!
vlan 40
        enable
        name "VLAN 40"
        member 17-18,63-64
!
!
vlan 4094
        enable
        name "VLAG_ISL"
        member 17-18
!
!
!
spanning-tree mstp version 10
spanning-tree mstp name "PureFlex"
spanning-tree mode mst
spanning-tree mstp cist-add-vlan 1
spanning-tree mstp cist-add-vlan 4095
!
spanning-tree stp 1 bridge priority 24576
spanning-tree stp 1 vlan 10
spanning-tree stp 1 vlan 30

spanning-tree stp 2 bridge priority 28672
spanning-tree stp 2 vlan 20
spanning-tree stp 2 vlan 40

no spanning-tree stp 32 enable
spanning-tree stp 32 vlan 4094


!
interface port 17
        lacp mode active
        lacp key 117
!
interface port 18
        lacp mode active
        lacp key 117
!
interface port 63
        lacp mode active
        lacp key 163
!
interface port 64
        lacp mode active
        lacp key 163
!
!
```

```
!
vlag enable
vlag tier-id 256
vlag isl vlan 4094
vlag hlthchk peer-ip 192.168.240.50
vlag isl adminkey 117
vlag adminkey 163 enable
!
!
!
!
!
!
!
!
!
!
lldp enable
!
interface ip 128
        ip address 192.168.240.40
        enable
        exit
!
ip gateway 4 address 192.168.240.1
ip gateway 4 enable
!
!
end
```

Example 3-34 Output of the show running command: G8264 switch 2

```
G8264_2#sh run
Current configuration:
!
version "7.2.2"
switch-type "IBM Networking Operating System RackSwitch G8264"
!
!

!
!
no system dhcp
hostname "G8264_2"
system idle 60
!
!
interface port 17
        name "CrossLink"
        tagging
        pvid 4094
        exit
!
interface port 18
        name "CrossLink"
        tagging
        pvid 4094
        exit
```

```
!
interface port 63
        name "DOWNLINK_TO_FLEX"
        tagging
        pvid 10
        exit
!
interface port 64
        name "DOWNLINK_TO_FLEX"
        tagging
        pvid 10
        exit
!
vlan 1
        member 1-16,19-62
        no member 17-18,63-64
!
!
vlan 10
        enable
        name "none"
        member 17-18,63-64
!
!
vlan 20
        enable
        name "none"
        member 17-18,63-64
!
!
vlan 30
        enable
        name "none"
        member 17-18,63-64
!
!
vlan 40
        enable
        name "VLAN 40"
        member 17-18,63-64
!
!
vlan 4094
        enable
        name "VLAG_ISL"
        member 17-18
!
!
!
spanning-tree mstp version 10
spanning-tree mstp name "PureFlex"
spanning-tree mode mst
spanning-tree mstp cist-add-vlan 1
spanning-tree mstp cist-add-vlan 4095
!
spanning-tree stp 1 bridge priority 28672
spanning-tree stp 1 vlan 10
spanning-tree stp 1 vlan 30

spanning-tree stp 2 bridge priority 24576
```

```
spanning-tree stp 2 vlan 20
spanning-tree stp 2 vlan 40

no spanning-tree stp 32 enable
spanning-tree stp 32 vlan 4094


!
interface port 17
        lacp mode active
        lacp key 117
!
interface port 18
        lacp mode active
        lacp key 117
!
interface port 63
        lacp mode active
        lacp key 163
!
interface port 64
        lacp mode active
        lacp key 163
!
!
!
vlag enable
vlag tier-id 256
vlag isl vlan 4094
vlag hlthchk peer-ip 192.168.240.40
vlag isl adminkey 117
vlag adminkey 163 enable
!
!
!
!
!
!
!
!
!
!
lldp enable
!
interface ip 128
        ip address 192.168.240.50
        enable
        exit
!
ip gateway 4 address 192.168.240.1
ip gateway 4 enable
!
!
!
!
!
!
end
```

3.6 Use Case 5: Link aggregation and VLAG without STP

The concept of virtual link aggregation (VLAG) shows the pair of G8264 switch logically as one switch entity. Together with LACP, this configuration allows the typical triangle design to be run, as shown in Figure 3-9, without spanning tree.

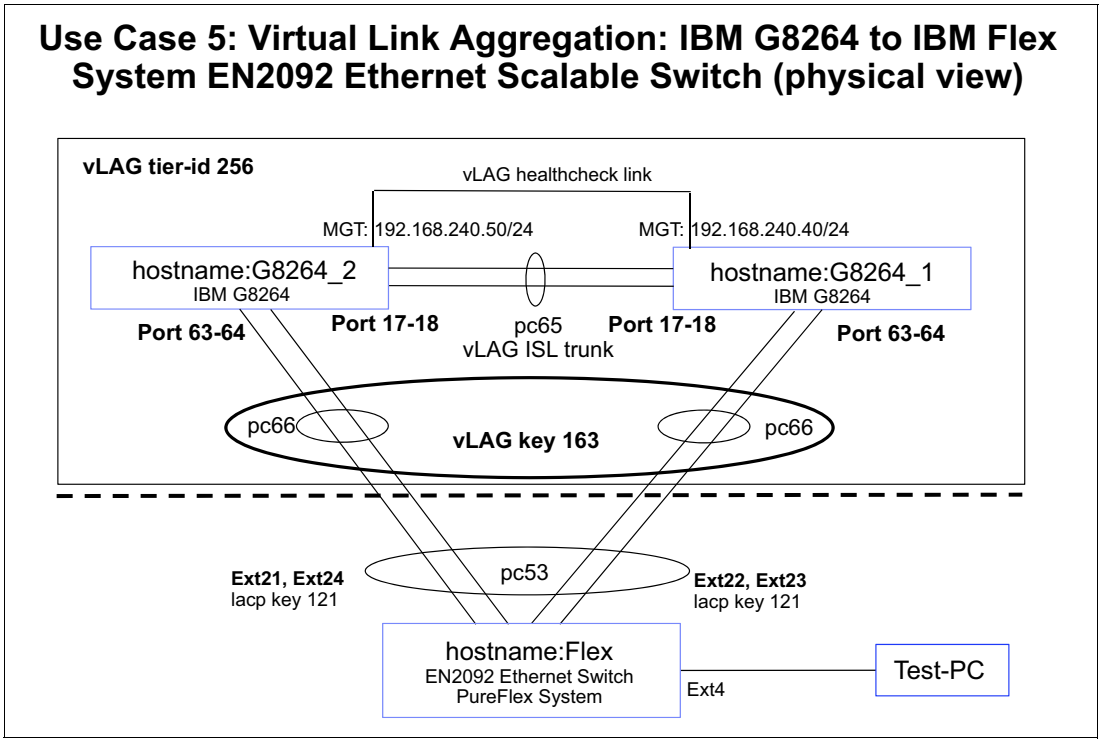

Figure 3-9 Use Case 5

3.6.1 Verifying the topology by using lldp

To verify the topology, we used the **show lldp remote-device** command on the switches, as shown in Example 3-35.

Example 3-35 Verifying the topology by using lldp

```
G8264_1#show lldp remote-device
LLDP Remote Devices Information

LocalPort | Index | Remote Chassis ID         | Remote Port          | Remote System Name
----------|-------|--------------------------|----------------------|-------------------
17        | 1     | fc cf 62 9d 67 00        | 17                   | G8264_2
63        | 2     | 08 17 f4 76 78 00        | 50                   | Flex
18        | 3     | fc cf 62 9d 67 00        | 18                   | G8264_2
64        | 4     | 08 17 f4 76 78 00        | 51                   | Flex

G8264_2#sh lldp remote-device
LLDP Remote Devices Information

LocalPort | Index | Remote Chassis ID         | Remote Port          | Remote System Name
----------|-------|--------------------------|----------------------|-------------------
17        | 1     | 08 17 f4 32 bb 00        | 17                   | G8264_1
63        | 2     | 08 17 f4 76 78 00        | 49                   | Flex
18        | 3     | 08 17 f4 32 bb 00        | 18                   | G8264_1
64        | 4     | 08 17 f4 76 78 00        | 52                   | Flex

Flex#sh lldp remote-device
LLDP Remote Devices Information

LocalPort | Index | Remote Chassis ID         | Remote Port          | Remote System Name
----------|-------|--------------------------|----------------------|-------------------
EXT22     | 1     | 08 17 f4 32 bb 00        | 63                   | G8264_1
EXT21     | 2     | fc cf 62 9d 67 00        | 63                   | G8264_2
INTA1     | 3     | 5c f3 fc 5f 43 9d        | 5c-f3-fc-5f-43-9d    |
INTA4     | 4     | 5c f3 fc 6e 23 41        | 5c-f3-fc-6e-23-41    |
EXT23     | 5     | 08 17 f4 32 bb 00        | 64                   | G8264_1
EXT5      | 6     | 00 0d ec a3 8f 81        | mgmt0                | vie
EXT7      | 7     | 00 05 9b 7b 84 01        | mgmt0                | str
EXT24     | 8     | fc cf 62 9d 67 00        | 64                   | G8264_2
```

3.6.2 Verify interface status

To verify the interface, we used the **show interface status** command on the switches, as shown in Example 3-36.

Example 3-36 Verify interface status

```
G8264_1#sh int status
-------------------------------------------------------------------
Alias   Port   Speed    Duplex     Flow Ctrl      Link       Name
------- ----   -----   --------  --TX-----RX--   ------     ------
1        1      10000     full      no     no      down      1
--
16       16     10000     full      no     no      down      16
17       17     10000     full      no     no       up       CrossLink
18       18     10000     full      no     no       up       CrossLink
19       19     1G/10G    full      no     no      down      19
--
```

```
62        62     1G/10G    full      no     no      down      62
63        63     10000     full      no     no       up       UPLINK_TO_FLEX
64        64     10000     full      no     no       up       UPLINK_TO_FLEX
MGT       65      1000     full     yes    yes       up       MGT

G8264_2#show interface status
-----------------------------------------------------------------
Alias   Port   Speed    Duplex     Flow Ctrl      Link       Name
------- ----   -----   --------  --TX-----RX--   ------     ------
1        1      40000     full      no     no      down      1
--
16       16     10000     full      no     no      down      16
17       17     10000     full      no     no       up       CrossLink
18       18     10000     full      no     no       up       CrossLink
19       19     1G/10G    full      no     no      down      19
--
62       62     1G/10G    full      no     no      down      62
63       63     10000     full      no     no       up       UPLINK_TO_FLEX
64       64     10000     full      no     no       up       UPLINK_TO_FLEX
MGT      65      1000     full     yes    yes       up       MGT

Flex#sh interface status
-----------------------------------------------------------------
Alias   Port   Speed    Duplex     Flow Ctrl      Link       Name
------- ----   -----   --------  --TX-----RX--   ------     ------
INTA1    1       1000     full     yes    yes       up       INTA1
INTA2    2       1000     full     yes    yes       up       INTA2
INTA3    3       1000     full     yes    yes      down      INTA3
INTA4    4       1000     full     yes    yes       up       INTA4
INTA5    5       1000     full     yes    yes      down      INTA5
INTA6    6       1000     full     yes    yes      down      INTA6
INTA7    7       1000     full     yes    yes    disabled    INTA7
INTA8    8       1000     full     yes    yes      down      INTA8
INTA9    9       1000     full     yes    yes      down      INTA9
INTA10   10      1000     full     yes    yes      down      INTA10
INTA11   11      1000     full     yes    yes      down      INTA11
INTA12   12      1000     full     yes    yes      down      INTA12
INTA13   13      1000     full     yes    yes      down      INTA13
INTA14   14      1000     full     yes    yes      down      INTA14
INTB1    15      1000     full     yes    yes      down      INTB1
--
INTB14   28      1000     full     yes    yes      down      INTB14
EXT1     29      1000     full      no     no       up       EXT1
EXT2     30      1000     full      no     no       up       EXT2
EXT3     31      1000     full      no     no       up       EXT3
EXT4     32      1000     full      no     no       up       TEST_PC
EXT5     33      1000     full      no     no       up       EXT5
--
EXT20    48       any      any      no     no      down      EXT20
EXT21    49     10000     full      no     no       up       TO_G8264_2_Port63
EXT22    50     10000     full      no     no       up       TO_G8264_1_Port63
EXT23    51     10000     full      no     no       up       TO_G8264_1_Port64
EXT24    52     10000     full      no     no       up       TO_G8264_2_Port64
MGT1     53      1000     full      no     no       up       MGT1
```

3.6.3 Verifying trunks

To verify which VLANs are active on which trunk, we used the **show interface trunk** command on the switches, as shown in Example 3-37.

Example 3-37 Verifying trunks

```
G8264_1#sh interface trunk
Alias   Port Tag RMON Lrn Fld PVID       NAME                 VLAN(s)
------- ---- --- ---- --- --- ----- -------------- -------------------------------
1       1     n   d    e   e     1                1
--
16      16    n   d    e   e     1                1
17      17    y   d    d   e  4094  CrossLink      10 20 30 40 4094
18      18    y   d    d   e  4094  CrossLink      10 20 30 40 4094
19      19    n   d    e   e     1                1
--
62      62    n   d    e   e     1                1
63      63    y   d    e   e    10  UPLINK_TO_FLEX 10 20 30 40
64      64    y   d    e   e    10  UPLINK_TO_FLEX 10 20 30 40
MGT     65    n   d    e   e  4095                4095

G8264_2#sh interface trunk
Alias   Port Tag RMON Lrn Fld PVID       NAME                 VLAN(s)
------- ---- --- ---- --- --- ----- -------------- -------------------------------
1       1     n   d    e   e     1                1
--
16      16    n   d    e   e     1                1
17      17    y   d    d   e  4094  CrossLink      10 20 30 40 4094
18      18    y   d    d   e  4094  CrossLink      10 20 30 40 4094
19      19    n   d    e   e     1                1
--
62      62    n   d    e   e     1                1
63      63    y   d    e   e    10  UPLINK_TO_FLEX 10 20 30 40
64      64    y   d    e   e    10  UPLINK_TO_FLEX 10 20 30 40
MGT     65    n   d    e   e  4095                4095

Flex#sh interface trunk
Alias   Port Tag RMON Lrn Fld PVID       NAME                 VLAN(s)
------- ---- --- ---- --- --- ----- -------------- -------------------------------
INTA1   1     n   d    e   e     1  INTA1          1
INTA2   2     y   d    e   e     1  INTA2          1
INTA3   3     n   d    e   e     1  INTA3          1
INTA4   4     n   d    e   e     1  INTA4          1
INTA5   5     n   d    e   e     1  INTA5          1
INTA6   6     n   d    e   e     1  INTA6          1
INTA7   7     n   d    e   e     1  INTA7          1
INTA8   8     n   d    e   e     1  INTA8          1
INTA9   9     n   d    e   e     1  INTA9          1
INTA10  10    n   d    e   e     1  INTA10         1
INTA11  11    n   d    e   e     1  INTA11         1
INTA12  12    n   d    e   e     1  INTA12         1
INTA13  13    n   d    e   e     1  INTA13         1
INTA14  14    n   d    e   e     1  INTA14         1
INTB1   15    n   d    e   e     1  INTB1          1
--
INTB14  28    n   d    e   e     1  INTB14         1
EXT1    29    n   d    e   e     1  EXT1           1
EXT2    30    n   d    e   e     1  EXT2           1
EXT3    31    n   d    e   e     1  EXT3           1
```

```
EXT4    32    y   d    e   e     1  TEST_PC        1 10 20 30 40
EXT5    33    n   d    e   e     1  EXT5           1
--
EXT20   48    n   d    e   e     1  EXT20          1
EXT21   49    y   d    e   e    10  TO_G8264_2_Port63 10 20 30 40
EXT22   50    y   d    e   e    10  TO_G8264_1_Port63 10 20 30 40
EXT23   51    y   d    e   e    10  TO_G8264_1_Port64 10 20 30 40
EXT24   52    y   d    e   e    10  TO_G8264_2_Port64 10 20 30 40
MGT1    53    y   d    e   e  4095  MGT1           4095
```

3.6.4 Verify virtual link aggregation

We verified the link aggregation configuration of the switches by executing various **show** commands, as shown in Example 3-38.

Example 3-38 Verify virtual link aggregation

```
G8264_1#show lacp information
port    mode    adminkey  operkey  selected   prio  aggr  trunk  status  minlinks
--------------------------------------------------------------------------------
1       off            1        1     no     32768    --     --    --        1
--
16      off           16       16     no     32768    --     --    --        1
17      active       117      117    yes     32768    17     65    up        1
18      active       117      117    yes     32768    17     65    up        1
19      off           19       19     no     32768    --     --    --        1
--
62      off           62       62     no     32768    --     --    --        1
63      active       163      163    yes     32768    63     66    up        1
64      active       163      163    yes     32768    63     66    up        1

G8264_1#sh lacp aggregator 63
Aggregator Id  63
----------------------------------------------
Aggregator MAC address  - 08:17:f4:32:bb:a0
Actor System Priority   - 32768
Actor System ID         - 08:17:f4:c3:dd:ff
Individual              - FALSE
Actor Oper Key          - 163
Partner System Priority - 32768
Partner System ID       - 08:17:f4:76:78:00
Partner Oper Key        - 121
ready                   - TRUE
Min-Links               - 1
Number of Ports in aggr - 2
index  0    port 63
index  1    port 64

G8264_1#show spanning-tree
Spanning Tree is shut down.

G8264_1#sh vlag
vLAG status: enabled
vLAG Tier ID: 256
vLAG system MAC: 08:17:f4:c3:dd:ff
Local Priority: 0
ISL Information: VLAN 4094, Trunk 0, LACP Key 117
Health check Peer IP Address: 192.168.240.50
Health check connection retry interval: 30 seconds
```

```
Health check number of keepalive attempts: 3
Health check keepalive interval: 5 seconds
vLAG startup delay interval: 120 seconds
Current LACP system ID: 08:17:f4:32:bb:00
Current LACP system Priority: 32768
Current LACP timeout scale: long

vLAG 65 : active
Current LACP params for 63:  active, Priority 32768, Admin Key 163, Min-Links 1

Current LACP params for 64:  active, Priority 32768, Admin Key 163, Min-Links 1

G8264_1#sh vlag information
vLAG Tier ID: 256
vLAG system MAC: 08:17:f4:c3:dd:ff
Local MAC 08:17:f4:32:bb:00 Priority 0 Admin Role PRIMARY (Operational Role SECONDARY)
Peer MAC fc:cf:62:9d:67:00 Priority 0
Health local 192.168.240.40 peer 192.168.240.50 State UP
ISL trunk id 65
ISL state    Up
Startup Delay Interval: 120s (Finished)

vLAG 65: config with admin key 163, associated trunk 66, state formed

G8264_1#sh vlag isl
ISL_ID   ISL_Vlan     ISL_Trunk        ISL_Members    Link_State    Trunk_State

65         4094      Adminkey 117          17           UP             UP
                                            18           UP             UP

G8264_1#sh vlag statistics

vLAG PDU sent:
Role Election:        6         System Info:           50
Peer Instance Enable: 5         Peer Instance Disable: 0
FDB Dynamic Add:      12        FDB Dynamic Del:       15
FDB Inactive Add:     0         FDB Inactive Del:      0
Health Check:         3392      ISL Hello:             292
Other:                0         Unknown:               0


vLAG PDU received:
Role Election:        5         System Info:           3
Peer Instance Enable: 6         Peer Instance Disable: 0
FDB Dynamic Add:      12        FDB Dynamic Del:       12
FDB Inactive Add:     0         FDB Inactive Del:      0
Health Check:         3387      ISL Hello:             231
Other:                0         Unknown:               0


vLAG IGMP packets forwarded:
IGMP Reports:         0
IGMP Leaves:          0
```

```
G8264_2#sh lacp information
port    mode    adminkey  operkey  selected   prio  aggr  trunk  status  minlinks
--------------------------------------------------------------------------------
1       off            1        1     no     32768    --     --    --        1
--
16      off           16       16     no     32768    --     --    --        1
17      active       117      117    yes     32768    17     65    up        1
18      active       117      117    yes     32768    17     65    up        1
19      off           19       19     no     32768    --     --    --        1
--
62      off           62       62     no     32768    --     --    --        1
63      active       163      163    yes     32768    64     66    up        1
64      active       163      163    yes     32768    64     66    up        1

G8264_2#sh lacp aggregator 64
Aggregator Id  64
----------------------------------------------
Aggregator MAC address  - fc:cf:62:9d:67:a0
Actor System Priority   - 32768
Actor System ID         - 08:17:f4:c3:dd:ff
Individual              - FALSE
Actor Oper Key          - 163
Partner System Priority - 32768
Partner System ID       - 08:17:f4:76:78:00
Partner Oper Key        - 121
ready                   - TRUE
Min-Links               - 1
Number of Ports in aggr - 2
index  0    port 63
index  1    port 64

G8264_2#sh vlag
vLAG status: enabled
vLAG Tier ID: 256
vLAG system MAC: 08:17:f4:c3:dd:ff
Local Priority: 0
ISL Information: VLAN 4094, Trunk 0, LACP Key 117
Health check Peer IP Address: 192.168.240.40
Health check connection retry interval: 30 seconds
Health check number of keepalive attempts: 3
Health check keepalive interval: 5 seconds
vLAG startup delay interval: 120 seconds
Current LACP system ID: fc:cf:62:9d:67:00
Current LACP system Priority: 32768
Current LACP timeout scale: long

vLAG 65 : active
Current LACP params for 63:  active, Priority 32768, Admin Key 163, Min-Links 1

Current LACP params for 64:  active, Priority 32768, Admin Key 163, Min-Links 1

G8264_2#sh vlag  information
vLAG Tier ID: 256
vLAG system MAC: 08:17:f4:c3:dd:ff
Local MAC fc:cf:62:9d:67:00 Priority 0 Admin Role SECONDARY (Operational Role PRIMARY)
Peer MAC 08:17:f4:32:bb:00 Priority 0
Health local 192.168.240.50 peer 192.168.240.40 State UP
ISL trunk id 65
ISL state    Up
Startup Delay Interval: 120s (Finished)
```

```
vLAG 65: config with admin key 163, associated trunk 66, state formed

G8264_2#sh vlag  adminkey 163
vLAG is enabled on admin key 163
Current LACP params for 63:  active, Priority 32768, Admin Key 163, Min-Links 1

Current LACP params for 64:  active, Priority 32768, Admin Key 163, Min-Links 1

G8264_2#sh vlag isl
ISL_ID   ISL_Vlan     ISL_Trunk        ISL_Members    Link_State    Trunk_State

65         4094      Adminkey 117          17           UP             UP
                                           18           UP             UP

G8264_2#sh vlag statistics

vLAG PDU sent:
Role Election:        5         System Info:           14
Peer Instance Enable: 6         Peer Instance Disable: 0
FDB Dynamic Add:      12        FDB Dynamic Del:       12
FDB Inactive Add:     0         FDB Inactive Del:      0
Health Check:         3546      ISL Hello:             321
Other:                0         Unknown:               0


vLAG PDU received:
Role Election:        6         System Info:           3
Peer Instance Enable: 5         Peer Instance Disable: 0
FDB Dynamic Add:      12        FDB Dynamic Del:       15
FDB Inactive Add:     0         FDB Inactive Del:      0
Health Check:         3540      ISL Hello:             321
Other:                0         Unknown:               0


vLAG IGMP packets forwarded:
IGMP Reports:         0
IGMP Leaves:          0

Flex#show lacp information
port    mode    adminkey  operkey  selected   prio  aggr  trunk  status  minlinks
--------------------------------------------------------------------------------
INTA1   off            1        1     no     32768    --     --    --        1
--
INTB14  off           28       28     no     32768    --     --    --        1
EXT1    off           29       29     no     32768    --     --    --        1
--
EXT20   off           48       48     no     32768    --     --    --        1
EXT21   active       121      121    yes     32768    52     53    up        1
EXT22   active       121      121    yes     32768    52     53    up        1
EXT23   active       121      121    yes     32768    52     53    up        1
EXT24   active       121      121    yes     32768    52     53    up        1

Flex#sh lacp aggregator 52
Aggregator Id  52
----------------------------------------------
Aggregator MAC address  - 08:17:f4:76:78:86
Actor System Priority   - 32768
Actor System ID         - 08:17:f4:76:78:00
Individual              - FALSE
```

```
Actor Oper Key          - 121
Partner System Priority - 32768
Partner System ID       - 08:17:f4:c3:dd:ff
Partner Oper Key        - 163
ready                   - TRUE
Min-Links               - 1
Number of Ports in aggr - 4
index  0    port EXT21
index  1    port EXT22
index  2    port EXT23
index  3    port EXT24
```

The Flex System switch now has one aggregated link (port channel) consisting of four connections to the logically unified pair of IBM G8264 switches. Previously, the Flex System switch featured two aggregated links that consisted of two connections each to two separate IBM G8264.

3.6.5 Show running-config of all switches in Use Case 5

The following configuration memory dumps of the IBM Flex Switch and both IBM System Network switches show the successfully tested setup. The essential parameters for this use case are highlighted in red.

The commands that were run on the three switches produced the following outputs:

- EN2029: Example 3-39
- G8264 switch 1: Example 3-40 on page 89
- G8264 switch 2: Example 3-41 on page 92

Example 3-39 Output of the show running command: EN2092

```
Flex#sh run
Current configuration:
!
version "7.2.2.2"
switch-type "IBM Flex System EN2092 1Gb Ethernet Scalable Switch"
!
!

snmp-server user 4 name "DirectorServerSNMPv3User"
snmp-server user 4 authentication-protocol sha authentication-password
"448edc340000882085a7b7f7c3b02bd2f0520e931ea46bc5b7eded9972fe826e1a0ef96428215042c04724d220
c902acd9"
snmp-server user 4 privacy-protocol des privacy-password
"453edd840110888084b7b6e7c2a02b7269f0ab694f0b3fefcd1dc2cefc9b2755a977e48dffb7f2c02ae685e8fd
38cfc425"
!
snmp-server group 4 user-name DirectorServerSNMPv3User
snmp-server group 4 group-name "ibmd_grp_4"
!
snmp-server access 4 name "ibmd_grp_4"
snmp-server access 4 level authPriv
snmp-server access 4 notify-view "iso"
!
snmp-server target-address 1 name "ibmd_taddr_1" address 192.168.10.103
snmp-server target-address 1 parameters-name "ibmd_tparam_1"
!
snmp-server target-parameters 1 name "ibmd_tparam_1"
snmp-server target-parameters 1 user-name "DirectorServerSNMPv3User"
```

```
snmp-server target-parameters 1 level authPriv
!
snmp-server version v1v2v3
!
snmp-server name "Flex"
!
hostname "Flex"
system idle 60
!
!
access http enable
access telnet enable
!
interface port INTA2
        tagging
        exit
!
interface port INTA7
        shutdown
        exit
!
interface port EXT4
        name "TEST_PC"
        tagging
        exit
!
interface port EXT21
        name "TO_G8264_2_Port63"
        tagging
        pvid 10
        exit
!
interface port EXT22
        name "TO_G8264_1_Port63"
        tagging
        pvid 10
        exit
!
interface port EXT23
        name "TO_G8264_1_Port64"
        tagging
        pvid 10
        exit
!
interface port EXT24
        name "TO_G8264_2_Port64"
        tagging
        pvid 10
        exit
!
vlan 1
        member INTA1-EXT20
        no member EXT21-EXT24
!
!
vlan 10
        enable
        name "Server"
        member EXT4,EXT21-EXT24
!
```

```
!
vlan 20
        enable
        name "Data20"
        member EXT4,EXT21-EXT24
!
!
vlan 30
        enable
        name "Data30"
        member EXT4,EXT21-EXT24
!
!
vlan 40
        enable
        name "Data40"
        member EXT4,EXT21-EXT24
!
!
!
spanning-tree mstp version 10
spanning-tree mstp name "PureFlex"
spanning-tree mode disable
!
spanning-tree stp 1 vlan 1
spanning-tree stp 1 vlan 10
spanning-tree stp 1 vlan 20
spanning-tree stp 1 vlan 30
spanning-tree stp 1 vlan 40

!
interface port EXT21
        lacp mode active
        lacp key 121
!
interface port EXT22
        lacp mode active
        lacp key 121
!
interface port EXT23
        lacp mode active
        lacp key 121
!
interface port EXT24
        lacp mode active
        lacp key 121
!
!
!
!
!
!
lldp enable
!
!
!
!
!
ntp enable
ntp ipv6 primary-server fe80::211:25ff:fec3:1420 MGT
```

```
ntp interval 15
ntp authenticate
ntp primary-key 49909
!
ntp message-digest-key 103 md5-ekey
0b87933c0300822886a6f2f7c0b021da71fedfcb71dca85400f52051d4db341ddc66d383102dc917aa13d6f2967
b6179f6d9396a95503e6e0217d9f7248c1c3a
!
! SNIP
! …more lines of “ntp message-digest-key”
! SNIP
!
ntp message-digest-key 64248 md5-ekey
898311380100002884a6f2f3c2b0a3dae66cc6e9326e294b602f8fc11ca24cca6780d1f7d5b707d49f028be5635
b0932ffcfc8aa484922018dc0863fb346e37a
!
ntp trusted-key
103,1821,2416,3343,4617,6903,7255,9094,10386,10939,12266,12389,13261,13280,13640,14424,1641
7,17555,17944,18537,19291,19742,19776,20027,21166,21710,22141,22512,23917,25162,25988,27418
,27687,27964,28200,29005,29180,29297,29395,31615,31972,32287,32782,34183,35544,35571,37155,
37414,37968,38424,38865,38947,39752,40976,41343,41997,42080,42261,42816,42898,43020,48745,4
9909,50872,51266,54111,54278,55616,57966,61370,62043,62789,63696,63785,64175,64248
!
end
```

Example 3-40 Output of the show running command: G8264 switch 1

```
G8264_1#sh run
Current configuration:
!
version "7.2.2"
switch-type "IBM Networking Operating System RackSwitch G8264"
!
!

!
!
no system dhcp
hostname "G8264_1"
system idle 60
!
!
interface port 17
        name "CrossLink"
        tagging
        pvid 4094
        exit
!
interface port 18
        name "CrossLink"
        tagging
        pvid 4094
        exit
!
interface port 63
        name "DOWNLINK_TO_FLEX"
        tagging
        pvid 10
```

```
        exit
!
interface port 64
        name "DOWNLINK_TO_FLEX"
        tagging
        pvid 10
        exit
!
vlan 1
        member 1-16,19-62
        no member 17-18,63-64
!
!
vlan 10
        enable
        name "none"
        member 17-18,63-64
!
!
vlan 20
        enable
        name "none"
        member 17-18,63-64
!
!
vlan 30
        enable
        name "none"
        member 17-18,63-64
!
!
vlan 40
        enable
        name "VLAN 40"
        member 17-18,63-64
!
!
vlan 4094
        enable
        name "VLAG_ISL"
        member 17-18
!
!
!
spanning-tree mstp version 10
spanning-tree mstp name "PureFlex"
spanning-tree mode disable
!
spanning-tree stp 1 bridge priority 24576
spanning-tree stp 1 vlan 1
spanning-tree stp 1 vlan 10
spanning-tree stp 1 vlan 20
spanning-tree stp 1 vlan 30
spanning-tree stp 1 vlan 40

spanning-tree stp 2 bridge priority 28672
no spanning-tree stp 32 enable
spanning-tree stp 32 vlan 4094

!
```

```
interface port 17
        lacp mode active
        lacp key 117
!
interface port 18
        lacp mode active
        lacp key 117
!
interface port 63
        lacp mode active
        lacp key 163
!
interface port 64
        lacp mode active
        lacp key 163
!
!
!
vlag enable
vlag tier-id 256
vlag isl vlan 4094
vlag hlthchk peer-ip 192.168.240.50
vlag isl adminkey 117
vlag adminkey 163 enable
!
!
!
!
!
!
!
!
!
!
lldp enable
!
interface ip 128
        ip address 192.168.240.40
        enable
        exit
!
ip gateway 4 address 192.168.240.1
ip gateway 4 enable
!
!
end
```

Example 3-41 Output of the show running command: G8264 switch 2

```
G8264_2#sh run
Current configuration:
!
version "7.2.2"
switch-type "IBM Networking Operating System RackSwitch G8264"
!
!

!
!
no system dhcp
hostname "G8264_2"
system idle 60
!
!
interface port 17
        name "CrossLink"
        tagging
        pvid 4094
        exit
!
interface port 18
        name "CrossLink"
        tagging
        pvid 4094
        exit
!
interface port 63
        name "DOWNLINK_TO_FLEX"
        tagging
        pvid 10
        exit
!
interface port 64
        name "DOWNLINK_TO_FLEX"
        tagging
        pvid 10
        exit
!
vlan 1
        member 1-16,19-62
        no member 17-18,63-64
!
!
vlan 10
        enable
        name "none"
        member 17-18,63-64
!
!
vlan 20
        enable
        name "none"
        member 17-18,63-64
!
!
vlan 30
        enable
        name "none"
```

```
        member 17-18,63-64
!
!
vlan 40
        enable
        name "VLAN 40"
        member 17-18,63-64
!
!
vlan 4094
        enable
        name "VLAG_ISL"
        member 17-18
!
!
!
spanning-tree mstp version 10
spanning-tree mstp name "PureFlex"
spanning-tree mode disable
!
spanning-tree stp 1 bridge priority 28672
spanning-tree stp 1 vlan 1
spanning-tree stp 1 vlan 10
spanning-tree stp 1 vlan 20
spanning-tree stp 1 vlan 30
spanning-tree stp 1 vlan 40

spanning-tree stp 2 bridge priority 24576
no spanning-tree stp 32 enable
spanning-tree stp 32 vlan 4094

!
interface port 17
        lacp mode active
        lacp key 117
!
interface port 18
        lacp mode active
        lacp key 117
!
interface port 63
        lacp mode active
        lacp key 163
!
interface port 64
        lacp mode active
        lacp key 163
!
!
!
vlag enable
vlag tier-id 256
vlag isl vlan 4094
vlag hlthchk peer-ip 192.168.240.40
vlag isl adminkey 117
vlag adminkey 163 enable
!
!
!
!
```

```
!
!
!
!
!
!
lldp enable
!
interface ip 128
        ip address 192.168.240.50
        enable
        exit
!
ip gateway 4 address 192.168.240.1
ip gateway 4 enable
!
!
!
!
!
!
end
```

4

Cisco Nexus 5000 connectivity

In this chapter, we describe the process that was used to test the Layer 2 interoperability between Cisco Nexus 5000 Switches and the embedded IBM Flex System switch. The embedded IBM Flex Switch was connected to two Cisco Nexus 5000 switches.

We tested Layer 2 connectivity trunking, channeling (link aggregation), and spanning tree. For trunking, we used 802.1q. For link aggregation, we tested static and LACP. The tested spanning trees were PVRST and MSTP. To show load balancing (even if spanning tree is active), we configured even and odd VLANS. Finally, we tested vPC to activate all of the links.

To verify Layer 2 topology, we used Link Layer Discovery Protocol (LLDP) as the vendor independent protocol.

Important: IBM switches do not support the proprietary Cisco Discovery Protocol (CDP) protocol.

This chapter includes the following topics:

- Prerequisites
- Use Case 1: PVRST
- Use Case 2: PVRST with LACP Channeling
- Use Case 3: MST with LACP Channeling
- Use Case 4: MST with LACP Channeling and vPC
- Use Case 5: LACP Channeling and vPC without spanning tree

4.1 Prerequisites

We started by physically connecting a triangle with two Cisco Nexus 5000 switches and one IBM Systems Networking embedded Flex Switch. We configured four VLANs and set up Per VLAN Rapid Spanning Tree (PVRST). To test connectivity, we used a test PC.

We used the following switches and one PC to test connectivity:

- One Cisco Nexus 5010 Switch
- One Cisco Nexus 5020 Switch
- One IBM Flex System EN2092 1-Gb Ethernet Scalable Switch
- One test PC

All of the links between the switches are 10 Gigabit Ethernet.

4.2 Use Case 1: PVRST

In our first use case, we used three 10 GE links to connect the switches. We also configured 802.1q trunks and PVRST. For load balancing, odd VLANs 10 and 30, and even VLANs 20 and 40 are used, as shown in Figure 4-1.

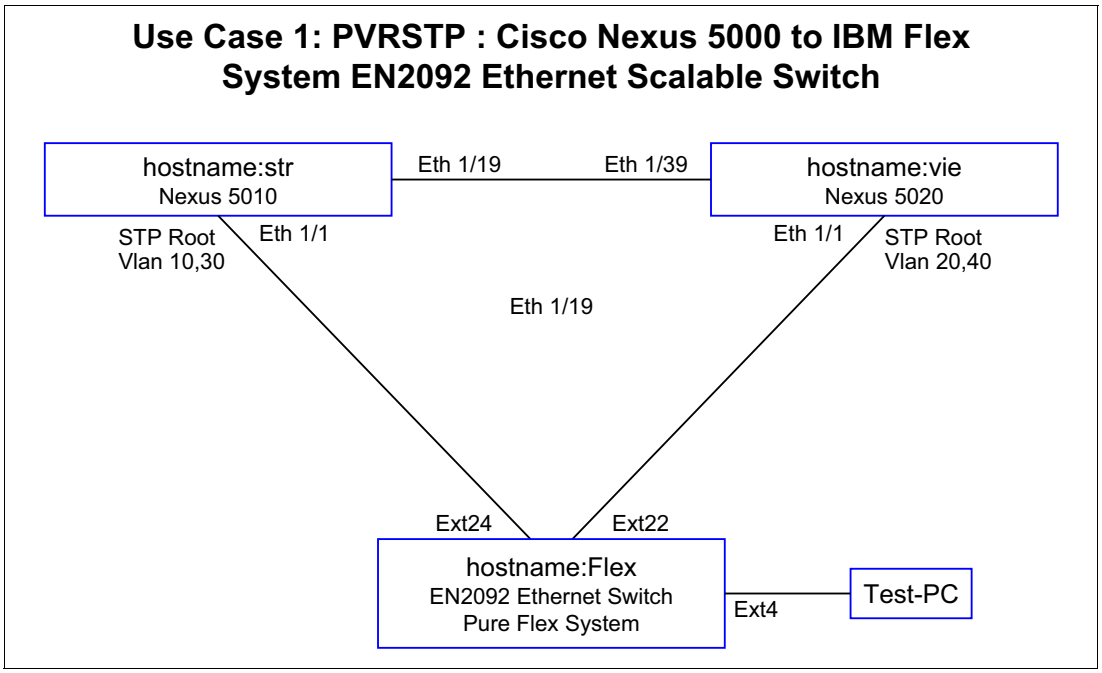

Figure 4-1 Use Case 1

4.2.1 Verifying the topology that is used by using lldp

To verify our configurations, we used several show commands on the IBM and Cisco switches, as shown in Example 4-1 on page 97. The essential parameters for this use case are highlighted in red.

To check the topology, we used the **`show lldp remote-device`** command on the IBM Flex System switch and the **`show lldp neighbors`** command on the Cisco Nexus switch. The important parameters and details are highlighted in red.

Example 4-1 Verifying configurations

```
Flex#show lldp remote-device

LLDP Remote Devices Information

LocalPort | Index | Remote Chassis ID         | Remote Port          | Remote System Name
----------|-------|---------------------------|----------------------|-----
EXT22     | 1     | 00 0d ec a3 8f 88         | Eth1/1               | vie
EXT24     | 2     | 00 05 9b 7b 84 08         | Eth1/1               | str
INTA1     | 3     | 5c f3 fc 5f 43 9d         | 5c-f3-fc-5f-43-9d    |

!--- Display the LLDP remote devices. Note that you must enable
!--- "feature lldp" on the N5000.
!--- The local Port Numbers of the Pure Flex System Ethernet Switch
!--- distinguish between internal and external Ethernet ports.

str# show lldp neighbors
Capability codes:
  (R) Router, (B) Bridge, (T) Telephone, (C) DOCSIS Cable Device
  (W) WLAN Access Point, (P) Repeater, (S) Station, (O) Other
Device ID            Local Intf      Hold-time  Capability  Port ID
Flex                 Eth1/1          120        BR          52
vie                  Eth1/19         120        B           Eth1/39
Total entries displayed: 2

!--- The Port named EXT22 at the Pure Flex System Ethernet Switch has the
!--- port ID 52 which is shown in the show lldp neighbors here.

vie# show lldp neighbors
Capability codes:
  (R) Router, (B) Bridge, (T) Telephone, (C) DOCSIS Cable Device
  (W) WLAN Access Point, (P) Repeater, (S) Station, (O) Other
Device ID            Local Intf      Hold-time  Capability  Port ID
Flex                 Eth1/1          120        BR          50
str                  Eth1/39         120        B           Eth1/19
Total entries displayed: 2

!--- The Port named EXT24 at the Pure Flex System Ethernet Switch has the
!--- port ID 50 which is shown in the show lldp neighbors here.
Port EXT22 = Port ID 50
```

4.2.2 Verifying trunks

To verify which VLANs are active on which trunk, we used the **show interface trunk** command on the IBM Flex System switch and the Cisco Nexus switch, as shown in Example 4-2. The important parameters and details are highlighted in red.

Example 4-2 Output of show interface trunk command

```
Flex#show interface trunk
Alias   Port Tag RMON Lrn Fld PVID  NAME      VLAN(s)
------- ---- --- ---- --- --- ----- -------------- -----------------
...
EXT4    32    y   d    e   e     1  TEST_PC        1 10 20 30 40
...
EXT22   50    y   d    e   e    10  TO_VIE_ETH1/1  10 20 30 40
...
EXT24   52    y   d    e   e    10  TO_STR_ETH1/1  10 20 30 40


str# show interface trunk

--------------------------------------------------------------------------------
Port          Native  Status        Port
              Vlan                  Channel
--------------------------------------------------------------------------------
Eth1/1        10      trunking      --
Eth1/2        1       trunking      --
Eth1/19       1       trunking      --
Eth1/20       1       trunking      --

--------------------------------------------------------------------------------
Port          Vlans Allowed on Trunk
--------------------------------------------------------------------------------
Eth1/1        10,20,30,40
Eth1/2        1-3967,4048-4093
Eth1/19       1-3967,4048-4093
Eth1/20       1-3967,4048-4093

--------------------------------------------------------------------------------
Port          Vlans Err-disabled on Trunk
--------------------------------------------------------------------------------
Eth1/1        none
Eth1/2        none
Eth1/19       none
Eth1/20       none

--------------------------------------------------------------------------------
Port          STP Forwarding
--------------------------------------------------------------------------------
Eth1/1        10,20,30,40
Eth1/2        none
Eth1/19       1,10,20,30,40
Eth1/20       none

--------------------------------------------------------------------------------
Port          Vlans in spanning tree forwarding state and not pruned
--------------------------------------------------------------------------------
Eth1/1        --
Eth1/2        --
Eth1/19       --
```

```
Eth1/20       --


vie# show interface trunk

--------------------------------------------------------------------------------
Port          Native  Status        Port
              Vlan                  Channel
--------------------------------------------------------------------------------
Eth1/1        10      trunking      --
Eth1/2        1       trunking      --
Eth1/39       1       trunking      --
Eth1/40       1       trunking      --

--------------------------------------------------------------------------------
Port          Vlans Allowed on Trunk
--------------------------------------------------------------------------------
Eth1/1        10,20,30,40
Eth1/2        1-3967,4048-4093
Eth1/39       1-3967,4048-4093
Eth1/40       1-3967,4048-4093

--------------------------------------------------------------------------------
Port          Vlans Err-disabled on Trunk
--------------------------------------------------------------------------------
Eth1/1        none
Eth1/2        none
Eth1/39       none
Eth1/40       none

--------------------------------------------------------------------------------
Port          STP Forwarding
--------------------------------------------------------------------------------
Eth1/1        10,20,30,40
Eth1/2        none
Eth1/39       1,10,20,30,40
Eth1/40       none

--------------------------------------------------------------------------------
Port          Vlans in spanning tree forwarding state and not pruned
--------------------------------------------------------------------------------
Eth1/1        --
Eth1/2        --
Eth1/39       --
Eth1/40       --
```

As shown in Figure 4-2 on page 100 and Figure 4-3 on page 100, we have two spanning trees, one for even-numbered VLANs and one for odd-numbered VLANs. By using the show spanning tree command, you can verify the status of the respective Ethernet interface's VLAN, port state, and port role.

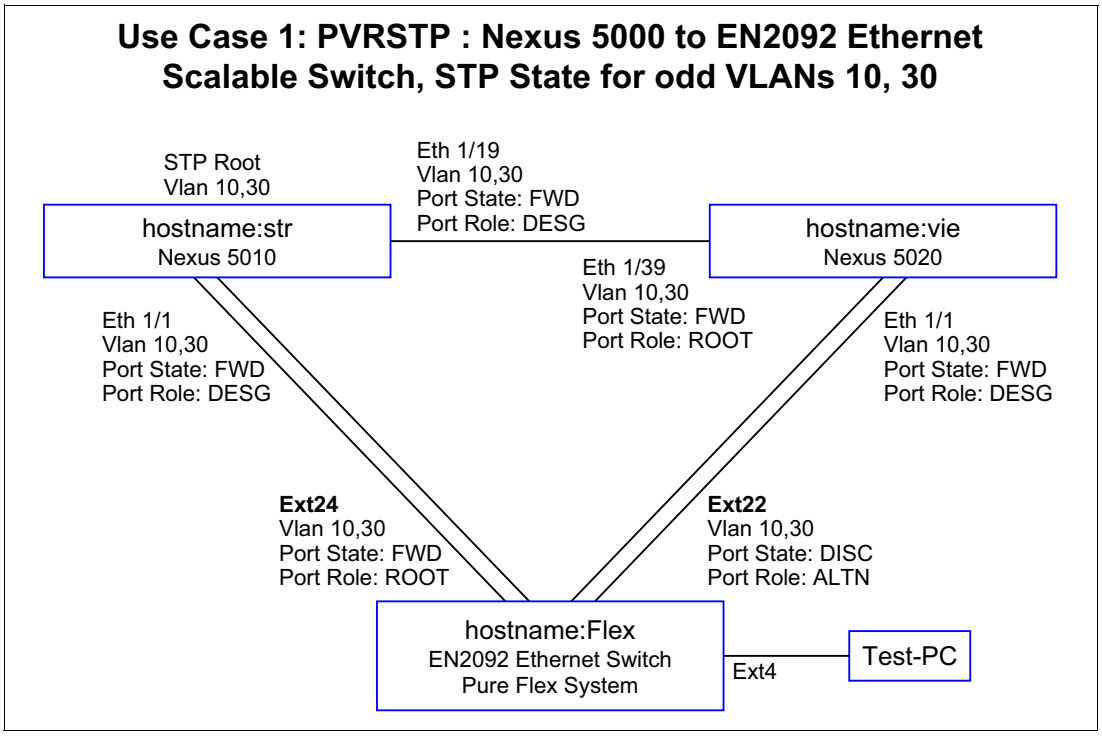

Figure 4-2 Use Case 1: Odd-numbered VLANs

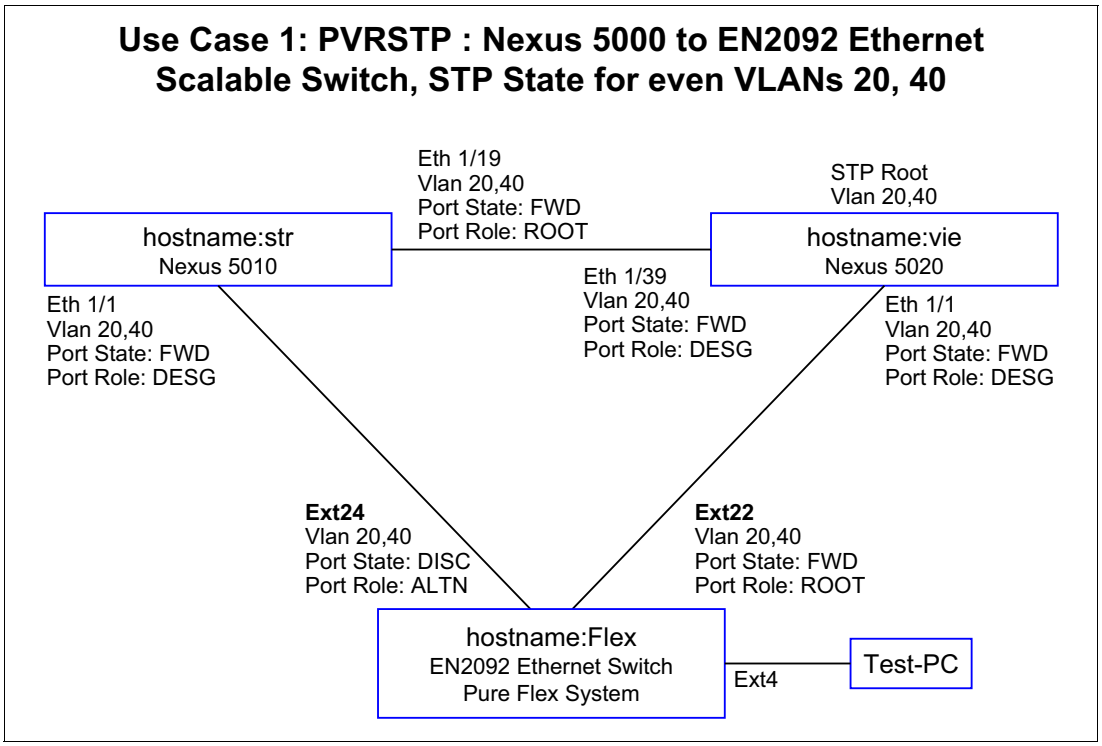

Figure 4-3 Use Case 1: Even-numbered VLANs

In the next step, we verified the PVRST spanning tree configuration of the switches by executing the **`show spanning-tree`** command.

The commands that were run on the three switches produced the following outputs:

- Flex System EN2029: Example 4-3
- G8264 STR switch: Example 4-4 on page 102
- G8264 VIE switch: Example 4-5 on page 104

Important parameters and details are highlighted in red.

Example 4-3 Outout of show spanning-tree command: Flex System switch

```
Flex#show spanning-tree
-----------------------------------------------------------------
Pvst+ compatibility mode enabled
-----------------------------------------------------------------
Spanning Tree Group 10: On (PVRST)
VLANs:  10

Current Root:            Path-Cost  Port Hello MaxAge FwdDel
 600a 00:05:9b:7b:84:3c     2000   EXT24    2     20     15

!--- Compare the ID of the Root with the LLDP output to identify the root switch.

Parameters:  Priority  Hello  MaxAge  FwdDel  Aging   Topology Change Counts
           61450     2     20     15    300             12Press q to

    Port      Prio    Cost    State  Role Designated Bridge      Des Port    Type
------------- ---- ---------- -----  ---- ---------------------- -------- ----------
EXT4           128     20000!  FWD   DESG f00a-08:17:f4:76:78:00     8020        P2P
EXT22          128      2000!  DISC  ALTN 700a-00:0d:ec:a3:8f:bc     8081        P2P
EXT24          128      2000!  FWD   ROOT 600a-00:05:9b:7b:84:3c     8081        P2P
! = Automatic path cost.

-----------------------------------------------------------------
Spanning Tree Group 20: On (PVRST)
VLANs:  20

Current Root:            Path-Cost  Port Hello MaxAge FwdDel
 6014 00:0d:ec:a3:8f:bc     2000   EXT22    2     20     15

Parameters:  Priority  Hello  MaxAge  FwdDel  Aging   Topology Change Counts
              61460      2      20      15     300                  1

    Port      Prio    Cost    State  Role Designated Bridge      Des Port    Type
------------- ---- ---------- -----  ---- ---------------------- -------- ----------
EXT4           128     20000!  DISC  DESG f014-08:17:f4:76:78:00     8020        P2P
EXT22          128      2000!  FWD   ROOT 6014-00:0d:ec:a3:8f:bc     8081        P2P
EXT24          128      2000!  DISC  ALTN 7014-00:05:9b:7b:84:3c     8081        P2P
! = Automatic path cost.

-----------------------------------------------------------------
Spanning Tree Group 30: On (PVRST)
VLANs:  30

Current Root:            Path-Cost  Port Hello MaxAge FwdDel
 601e 00:05:9b:7b:84:3c     2000   EXT24    2     20     15

Parameters:  Priority  Hello  MaxAge  FwdDel  Aging   Topology Change Counts
           61470     2     20     15Press q to quit, any other key to cont    300
1

    Port      Prio    Cost    State  Role Designated Bridge      Des Port    Type
```

```
------------- ---- ---------- -----  ---- ---------------------- -------- ----------
EXT4           128     20000!  DISC  DESG f01e-08:17:f4:76:78:00     8020        P2P
EXT22          128      2000!  DISC  ALTN 701e-00:0d:ec:a3:8f:bc     8081        P2P
EXT24          128      2000!  FWD   ROOT 601e-00:05:9b:7b:84:3c     8081        P2P
! = Automatic path cost.

-----------------------------------------------------------------
Spanning Tree Group 40: On (PVRST)
VLANs:  40

Current Root:            Path-Cost  Port Hello MaxAge FwdDel
 6028 00:0d:ec:a3:8f:bc     2000   EXT22    2     20     15

Parameters:  Priority  Hello  MaxAge  FwdDel  Aging   Topology Change Counts
              61480      2      20      15     300                  1

    Port      Prio    Cost    State  Role Designated Bridge      Des Port    Type
------------- ---- ---------- -----  ---- ---------------------- -------- ----------
EXT4           128     20000!  DISC  DESG f028-08:17:f4:76:78:00     8020        P2P
EXT22          128      2000!  FWD   ROOT 6028-00:0d:ec:a3:8f:bc     8081        P2P
EXT24          128      2000!  DISC  ALTN 7028-00:05:9b:7b:84:3c     8081        P2P
! = Automatic path cost.

-----------------------------------------------------------------
Spanning Tree Group 128: Off (PVRST), FDB aging timer 300
VLANs:  4095

    Port      Prio    Cost    State  Role Designated Bridge      Des Port    Type
------------- ---- ---------- -----  ---- ---------------------- -------- ----------
MGT1             0         0   FWD *
* = STP turned off for this port.
```

Example 4-4 Output of show spanning-tree command: STR switch

```
str# show spanning-tree

VLAN0001
  Spanning tree enabled protocol rstp
  Root ID    Priority    32769
             Address     0005.9b7b.843c
             This bridge is the root
             Hello Time  2  sec  Max Age 20 sec  Forward Delay 15 sec

  Bridge ID  Priority    32769  (priority 32768 sys-id-ext 1)
             Address     0005.9b7b.843c
             Hello Time  2  sec  Max Age 20 sec  Forward Delay 15 sec

Interface        Role Sts Cost      Prio.Nbr Type
---------------- ---- --- --------- -------- --------------------------------
Eth1/19          Desg FWD 2         128.147  P2p


VLAN0010
  Spanning tree enabled protocol rstp
  Root ID    Priority    24586
             Address     0005.9b7b.843c
             This bridge is the root
             Hello Time  2  sec  Max Age 20 sec  Forward Delay 15 sec
```

```
!--- Compare the address (ID) of the Root with the LLDP output to identify the root switch
.

  Bridge ID  Priority    24586  (priority 24576 sys-id-ext 10)
             Address     0005.9b7b.843c
             Hello Time  2  sec  Max Age 20 sec  Forward Delay 15 sec

Interface        Role Sts Cost      Prio.Nbr Type
---------------- ---- --- --------- -------- --------------------------------
Eth1/1           Desg FWD 2         128.129  P2p
Eth1/19          Desg FWD 2         128.147  P2p


VLAN0020
  Spanning tree enabled protocol rstp
  Root ID    Priority    24596
             Address     000d.eca3.8fbc
             Cost        2
             Port        147 (Ethernet1/19)
             Hello Time  2  sec  Max Age 20 sec  Forward Delay 15 sec

  Bridge ID  Priority    28692  (priority 28672 sys-id-ext 20)
             Address     0005.9b7b.843c
             Hello Time  2  sec  Max Age 20 sec  Forward Delay 15 sec

Interface        Role Sts Cost      Prio.Nbr Type
---------------- ---- --- --------- -------- --------------------------------
Eth1/1           Desg FWD 2         128.129  P2p
Eth1/19          Root FWD 2         128.147  P2p


VLAN0030
  Spanning tree enabled protocol rstp
  Root ID    Priority    24606
             Address     0005.9b7b.843c
             This bridge is the root
             Hello Time  2  sec  Max Age 20 sec  Forward Delay 15 sec

  Bridge ID  Priority    24606  (priority 24576 sys-id-ext 30)
             Address     0005.9b7b.843c
             Hello Time  2  sec  Max Age 20 sec  Forward Delay 15 sec

Interface        Role Sts Cost      Prio.Nbr Type
---------------- ---- --- --------- -------- --------------------------------
Eth1/1           Desg FWD 2         128.129  P2p
Eth1/19          Desg FWD 2         128.147  P2p


VLAN0040
  Spanning tree enabled protocol rstp
  Root ID    Priority    24616
             Address     000d.eca3.8fbc
             Cost        2
             Port        147 (Ethernet1/19)
             Hello Time  2  sec  Max Age 20 sec  Forward Delay 15 sec

  Bridge ID  Priority    28712  (priority 28672 sys-id-ext 40)
             Address     0005.9b7b.843c
             Hello Time  2  sec  Max Age 20 sec  Forward Delay 15 sec
```

```
Interface        Role Sts Cost      Prio.Nbr Type
---------------- ---- --- --------- -------- --------------------------------
Eth1/1           Desg FWD 2         128.129  P2p
Eth1/19          Root FWD 2         128.147  P2p
```

Example 4-5 Output of show spanning-tree command: VIE switch

```
vie# show spanning-tree

VLAN0001
  Spanning tree enabled protocol rstp
  Root ID    Priority    32769
             Address     0005.9b7b.843c
             Cost        2
             Port        167 (Ethernet1/39)
             Hello Time  2  sec  Max Age 20 sec  Forward Delay 15 sec

  Bridge ID  Priority    32769  (priority 32768 sys-id-ext 1)
             Address     000d.eca3.8fbc
             Hello Time  2  sec  Max Age 20 sec  Forward Delay 15 sec

Interface        Role Sts Cost      Prio.Nbr Type
---------------- ---- --- --------- -------- --------------------------------
Eth1/39          Root FWD 2         128.167  P2p


VLAN0010
  Spanning tree enabled protocol rstp
  Root ID    Priority    24586
             Address     0005.9b7b.843c
             Cost        2
             Port        167 (Ethernet1/39)
             Hello Time  2  sec  Max Age 20 sec  Forward Delay 15 sec

  Bridge ID  Priority    28682  (priority 28672 sys-id-ext 10)
             Address     000d.eca3.8fbc
             Hello Time  2  sec  Max Age 20 sec  Forward Delay 15 sec

Interface        Role Sts Cost      Prio.Nbr Type
---------------- ---- --- --------- -------- --------------------------------
Eth1/1           Desg FWD 2         128.129  P2p
Eth1/39          Root FWD 2         128.167  P2p


VLAN0020
  Spanning tree enabled protocol rstp
  Root ID    Priority    24596
             Address     000d.eca3.8fbc
             This bridge is the root
             Hello Time  2  sec  Max Age 20 sec  Forward Delay 15 sec

  Bridge ID  Priority    24596  (priority 24576 sys-id-ext 20)
             Address     000d.eca3.8fbc
             Hello Time  2  sec  Max Age 20 sec  Forward Delay 15 sec

Interface        Role Sts Cost      Prio.Nbr Type
---------------- ---- --- --------- -------- --------------------------------
```

```
Eth1/1           Desg FWD 2         128.129  P2p
Eth1/39          Desg FWD 2         128.167  P2p


VLAN0030
  Spanning tree enabled protocol rstp
  Root ID    Priority    24606
             Address     0005.9b7b.843c
             Cost        2
             Port        167 (Ethernet1/39)
             Hello Time  2  sec  Max Age 20 sec  Forward Delay 15 sec

  Bridge ID  Priority    28702  (priority 28672 sys-id-ext 30)
             Address     000d.eca3.8fbc
             Hello Time  2  sec  Max Age 20 sec  Forward Delay 15 sec

Interface        Role Sts Cost      Prio.Nbr Type
---------------- ---- --- --------- -------- --------------------------------
Eth1/1           Desg FWD 2         128.129  P2p
Eth1/39          Root FWD 2         128.167  P2p


VLAN0040
  Spanning tree enabled protocol rstp
  Root ID    Priority    24616
             Address     000d.eca3.8fbc
             This bridge is the root
             Hello Time  2  sec  Max Age 20 sec  Forward Delay 15 sec

  Bridge ID  Priority    24616  (priority 24576 sys-id-ext 40)
             Address     000d.eca3.8fbc
             Hello Time  2  sec  Max Age 20 sec  Forward Delay 15 sec

Interface        Role Sts Cost      Prio.Nbr Type
---------------- ---- --- --------- -------- --------------------------------
Eth1/1           Desg FWD 2         128.129  P2p
Eth1/39          Desg FWD 2         128.167  P2p

vie#
```

4.2.3 Show running-config of all switches in Use Case 1

In the following configuration print outs of the IBM Flex System switch and the Cisco Nexus switches, you can comprehend the necessary configuration steps we did during our test. Important parameters and detail are highlighted in red.

> **Important:** Sections of the configuration output in Example 4-6 on page 106, Example 4-7 on page 108, and Example 4-8 on page 109 were removed to highlight the important parts of the outputs. The omissions are indicated by "...".

The commands that were run on the three switches produced the following outputs:

- Flex System EN2029: Example 4-6 on page 106
- G8264 STR switch: Example 4-7 on page 108
- G8264 VIE switch: Example 4-8 on page 109

Important parameters and details are highlighted in red.

Example 4-6 Output of show running-config command: Flex System switch

```
Flex# show running-config
!
version "7.2.2.2"
switch-type "IBM Flex System EN2092 1Gb Ethernet Scalable Switch"
!
!

…
hostname "Flex"
system idle 60
!
!
access http enable
access telnet enable
!
…
interface port EXT4
        name "TEST_PC"
        tagging
        exit
!
…
interface port EXT21
        tagging
        pvid 10
        exit
!
interface port EXT22
        name "TO_VIE_ETH1/1"
        tagging
        pvid 10
        exit
!
interface port EXT23
        tagging
        pvid 10
        exit
!
interface port EXT24
        name "TO_STR_ETH1/1"
        tagging
        pvid 10
        exit
!
vlan 1
        member INTA1-EXT20
        no member EXT21-EXT24
!
!
vlan 10
        enable
        name "Server"
        member EXT4,EXT21-EXT24
!
!
vlan 20
        enable
        name "Data20"
        member EXT4,EXT21-EXT24
```

```
!
!
vlan 30
        enable
        name "Data30"
        member EXT4,EXT21-EXT24
!
!
vlan 40
        enable
        name "Data40"
        member EXT4,EXT21-EXT24
!
!
!
spanning-tree stp 10 vlan 10

spanning-tree stp 20 vlan 20

spanning-tree stp 30 vlan 30

spanning-tree stp 40 vlan 40

!
!
!
!
!
!
lldp enable
!
!
!
!
!
...
end
```

Example 4-7 Output of show running-config command: STR switch

```
str# show running-config
version 5.1(3)N2(1)
hostname str

feature telnet
no feature http-server
feature lldp

username admin password 5 $1$Oc8ULbm7$bRaCJLmRCrkJRU1DcNaaJO  role network-admin

…

vrf context management
  ip route 0.0.0.0/0 192.168.240.1
vlan 1
vlan 10
  name Server
vlan 20
  name Data20
vlan 30
  name Data30
vlan 40
  name Data40
spanning-tree vlan 10,30 priority 24576
spanning-tree vlan 20,40 priority 28672


interface Ethernet1/1
  description TO_FLEX_EXT24
  switchport mode trunk
  switchport trunk native vlan 10
  switchport trunk allowed vlan 10,20,30,40

…

interface Ethernet1/19
  description TO_VIE_ETH1/39
  switchport mode trunk
  switchport access vlan 10

interface Ethernet1/20
  shutdown
  switchport mode trunk
  switchport access vlan 10

interface mgmt0
  ip address 192.168.240.30/24
clock timezone MESZ 2 0
line console
line vty
boot kickstart bootflash:/n5000-uk9-kickstart.5.1.3.N2.1.bin

boot system bootflash:/n5000-uk9.5.1.3.N2.1.bin
```

Example 4-8 Output of show running-config command: VIE switch

```
vie# show running-config
version 5.1(3)N2(1)
hostname vie

feature telnet
feature lldp

username admin password 5 $1$3QkdUbKB$s1Ytem8Ty6FfYtQc9Zs0k1  role network-admin
…
vrf context management
  ip route 0.0.0.0/0 192.168.240.1
vlan 1
vlan 10
  name Server
vlan 20
  name Data20
vlan 30
  name Data30
vlan 40
  name Data40
spanning-tree vlan 10,30 priority 28672
spanning-tree vlan 20,40 priority 24576


…
interface Ethernet1/1
  description TO_FLEX_EXT22
  switchport mode trunk
  switchport trunk native vlan 10
  switchport trunk allowed vlan 10,20,30,40



interface Ethernet1/39
  switchport mode trunk
  switchport access vlan 10
…

interface mgmt0
  no snmp trap link-status
  vrf member management
  ip address 192.168.240.20/24
clock timezone MESZ 2 0
line console
line vty
boot kickstart bootflash:/n5000-uk9-kickstart.5.1.3.N2.1.bin
boot system bootflash:/n5000-uk9.5.1.3.N2.1.bin
```

4.3 Use Case 2: PVRST with LACP Channeling

In this use case, we added a second link between each switch pair to test PVRST with LACP channeling (see Figure 4-4).

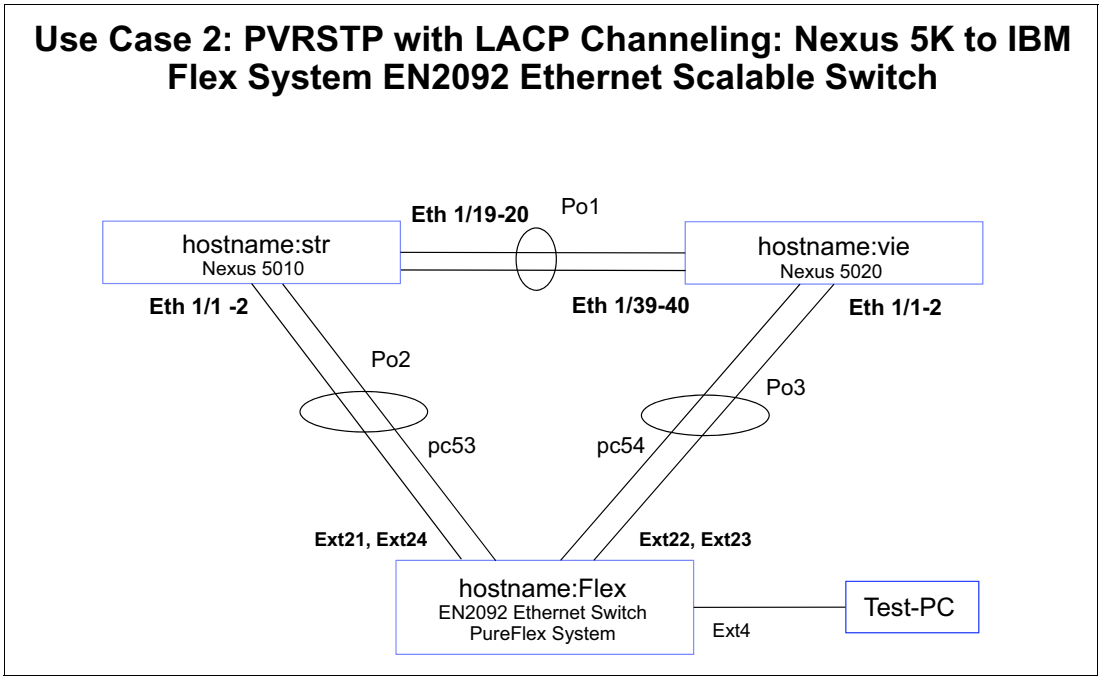

Figure 4-4 Use Case 2

4.3.1 Verifying the topology used by using lldp

As in Use Case 1, we verified the configurations with several show commands on the IBM and on the Cisco switches.

A best practice to check the topology is using **`show lldp remote-device`** on the IBM Flex System switch and **`show lldp neighbors`** on the Cisco Nexus switch. Important parameters and detail are highlighted in red.

The commands that were run on the three switches produced the following outputs:

- Flex System EN2029: Example 4-9 on page 111
- G8264 STR switch: Example 4-10 on page 111
- G8264 VIE switch: Example 4-11 on page 111

Example 4-9 Outpput of show lldp remote-device on the Flex System switch

```
Flex#show lldp remote-device

LLDP Remote Devices Information

LocalPort | Index | Remote Chassis ID         | Remote Port          | Remote System Name
----------|-------|---------------------------|----------------------|------------------
EXT22     | 1     | 00 0d ec a3 8f 88         | Eth1/1               | vie
EXT24     | 2     | 00 05 9b 7b 84 08         | Eth1/1               | str
INTA1     | 3     | 5c f3 fc 5f 43 9d         | 5c-f3-fc-5f-43-9d    |
EXT21     | 4     | 00 05 9b 7b 84 09         | Eth1/2               | str
EXT23     | 5     | 00 0d ec a3 8f 89         | Eth1/2               | vie
```

Example 4-10 Output of show lldp neighbor on the STR switch

```
str# show lldp neighbour

Capability codes:
  (R) Router, (B) Bridge, (T) Telephone, (C) DOCSIS Cable Device
  (W) WLAN Access Point, (P) Repeater, (S) Station, (O) Other
Device ID            Local Intf      Hold-time  Capability  Port ID
Flex                 Eth1/1          120        BR          52
Flex                 Eth1/2          120        BR          49
vie                  Eth1/19         120        B           Eth1/39
vie                  Eth1/20         120        B           Eth1/40
Total entries displayed: 4
```

Example 4-11 Output of show lldp neighbors on the VIE switch

```
vie# show lldp neighbors

Capability codes:
  (R) Router, (B) Bridge, (T) Telephone, (C) DOCSIS Cable Device
  (W) WLAN Access Point, (P) Repeater, (S) Station, (O) Other
Device ID            Local Intf      Hold-time  Capability  Port ID
Flex                 Eth1/1          120        BR          50
Flex                 Eth1/2          120        BR          51
str                  Eth1/39         120        B           Eth1/19
str                  Eth1/40         120        B           Eth1/20
```

4.3.2 Verifying trunks

To review which vlans are active on which trunk, we used the show interface trunk on IBM Flex switch and on the Cisco Nexus switch.

The commands that were run on the three switches produced the following outputs:

- Flex System EN2029: Example 4-12
- G8264 STR switch: Example 4-13 on page 113
- G8264 VIE switch: Example 4-14 on page 114

Important parameters and details are highlighted in red.

Example 4-12 Output of show interface trunk on the Flex System switch

```
Flex#show interface trunk

Alias   Port Tag RMON Lrn Fld PVID       NAME                 VLAN(s)
------- ---- --- ---- --- --- ----- -------------- -------------------------------
…
EXT4    32    y   d    e   e     1  TEST_PC        1 10 20 30 40
…
EXT21   49    y   d    e   e    10  TO_STR_ETH1/2  10 20 30 40
EXT22   50    y   d    e   e    10  TO_VIE_ETH1/1  10 20 30 40
EXT23   51    y   d    e   e    10  TO_VIE_ETH1/2  10 20 30 40
EXT24   52    y   d    e   e    10  TO_STR_ETH1/1  10 20 30 40
MGT1    53    y   d    e   e  4095  MGT1           4095
```

Example 4-13 Output of show interface trunk on the STR switch

```
str# show interface trunk

--------------------------------------------------------------------------------
Port          Native  Status        Port
              Vlan                  Channel
--------------------------------------------------------------------------------
Eth1/1        10      trnk-bndl     Po2
Eth1/2        10      trnk-bndl     Po2
Eth1/19       1       trnk-bndl     Po1
Eth1/20       1       trnk-bndl     Po1
Po1           1       trunking      --
Po2           10      trunking      --

--------------------------------------------------------------------------------
Port          Vlans Allowed on Trunk
--------------------------------------------------------------------------------
Eth1/1        10,20,30,40
Eth1/2        10,20,30,40
Eth1/19       1-3967,4048-4093
Eth1/20       1-3967,4048-4093
Po1           1-3967,4048-4093
Po2           10,20,30,40

--------------------------------------------------------------------------------
Port          Vlans Err-disabled on Trunk
--------------------------------------------------------------------------------
Eth1/1        none
Eth1/2        none
Eth1/19       none
Eth1/20       none
Po1           none
Po2           none

--------------------------------------------------------------------------------
Port          STP Forwarding
--------------------------------------------------------------------------------
Eth1/1        none
Eth1/2        none
Eth1/19       none
Eth1/20       none
Po1           1,10,20,30,40
Po2           10,20,30,40

--------------------------------------------------------------------------------
Port          Vlans in spanning tree forwarding state and not pruned
--------------------------------------------------------------------------------
Eth1/1        --
Eth1/2        --
Eth1/19       --
Eth1/20       --
Po1           --
Po2           --
```

Example 4-14 Output of show interface trunk on the VIE switch

```
vie# show interface trunk

--------------------------------------------------------------------------------
Port          Native  Status        Port
              Vlan                  Channel
--------------------------------------------------------------------------------
Eth1/1        10      trnk-bndl     Po3
Eth1/2        10      trnk-bndl     Po3
Eth1/39       1       trnk-bndl     Po1
Eth1/40       1       trnk-bndl     Po1
Po1           1       trunking      --
Po3           10      trunking      --

--------------------------------------------------------------------------------
Port          Vlans Allowed on Trunk
--------------------------------------------------------------------------------
Eth1/1        10,20,30,40
Eth1/2        10,20,30,40
Eth1/39       1-3967,4048-4093
Eth1/40       1-3967,4048-4093
Po1           1-3967,4048-4093
Po3           10,20,30,40

--------------------------------------------------------------------------------
Port          Vlans Err-disabled on Trunk
--------------------------------------------------------------------------------
Eth1/1        none
Eth1/2        none
Eth1/39       none
Eth1/40       none
Po1           none
Po3           none

--------------------------------------------------------------------------------
Port          STP Forwarding
--------------------------------------------------------------------------------
Eth1/1        none
Eth1/2        none
Eth1/39       none
Eth1/40       none
Po1           1,10,20,30,40
Po3           10,20,30,40

--------------------------------------------------------------------------------
Port          Vlans in spanning tree forwarding state and not pruned
--------------------------------------------------------------------------------
Eth1/1        --
Eth1/2        --
Eth1/39       --
Eth1/40       --
Po1           --
Po3           --
```

4.3.3 Verifying PVRST spanning tree configuration

In the next step, we verified the PVRST spanning tree configuration of the switches by executing the **`show spanning-tree`** command. In Figure 4-5 and Figure 4-6 on page 116, showing even and odd VLANs, you can verify the status on the respective Ethernet interface-referring VLAN, port state, and port role.

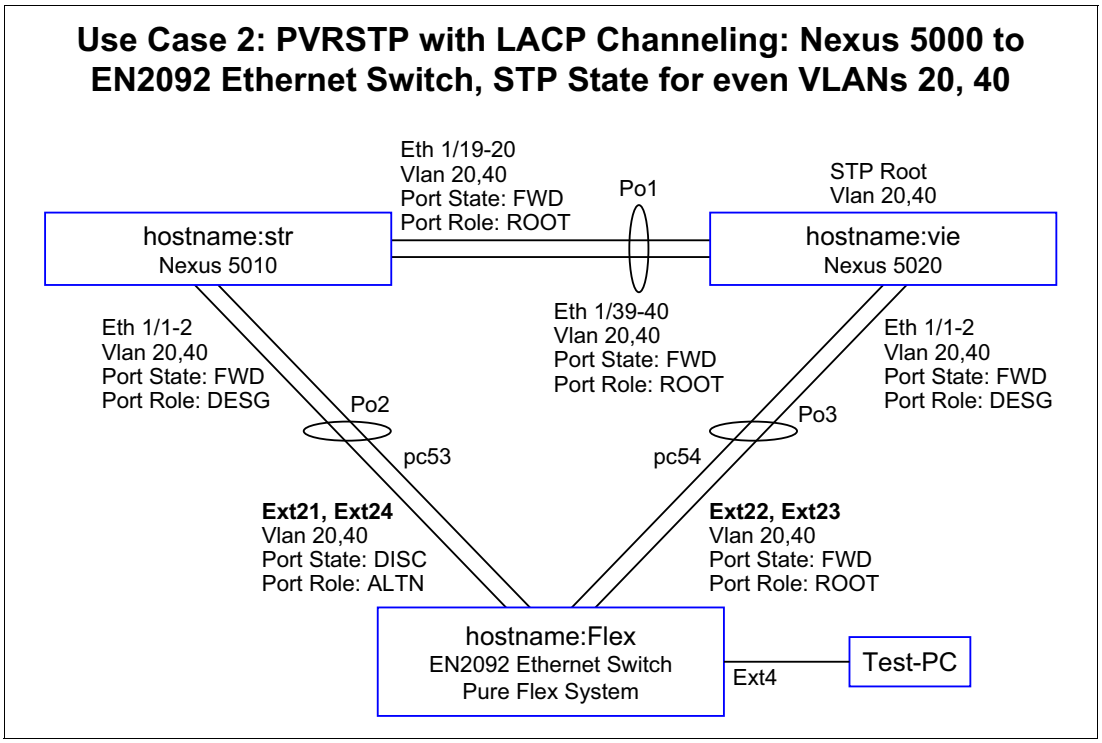

Figure 4-5 Use Case 2: Even-numbered VLANs

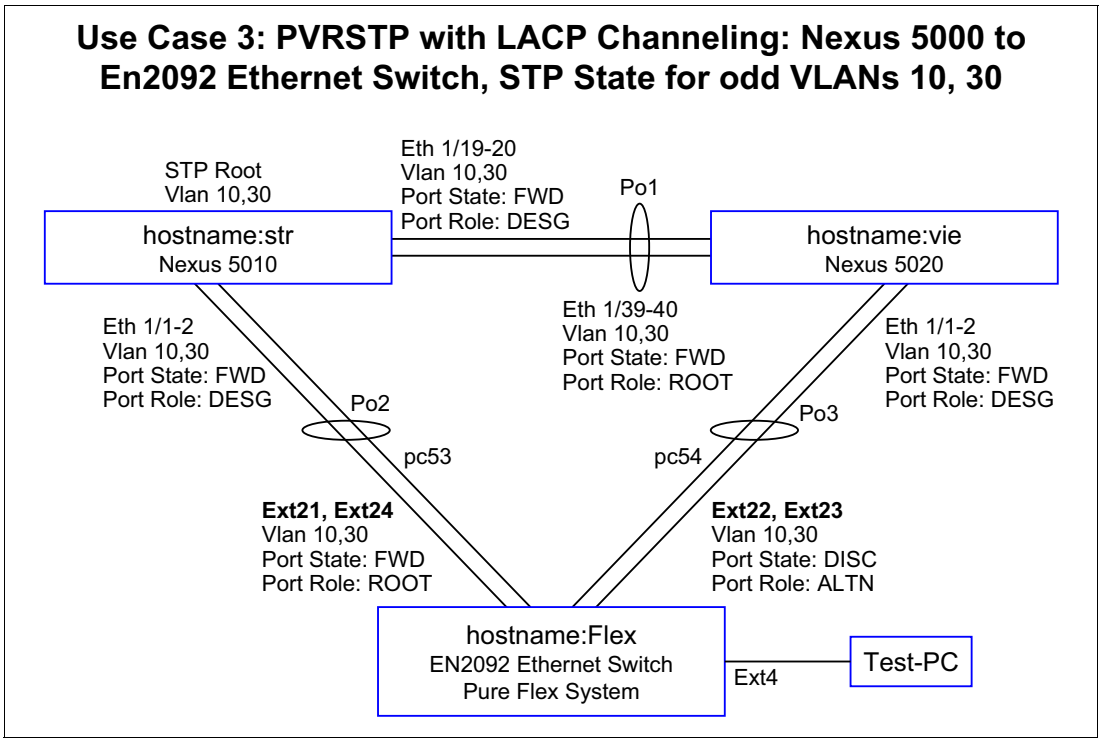

Figure 4-6 Use Case 2: Odd-numbered VLANs

In Example 4-15, the outputs of the show commands of the Flex System and Nexus switches show all of the link pairs are successfully channeled with LACP. The important parameters and details are highlighted in red.

Example 4-15 Configuration output

```
Flex#show spanning-tree

-----------------------------------------------------------------
Pvst+ compatibility mode enabled

-----------------------------------------------------------------
Spanning Tree Group 1: On (PVRST)
VLANs:  1

Current Root:            Path-Cost  Port Hello MaxAge FwdDel
 8000 00:16:ca:a1:c1:00    20000    EXT3    2     20     15

Parameters:  Priority  Hello  MaxAge  FwdDel  Aging   Topology Change Counts
              61441      2      20      15     300                  13

    Port      Prio    Cost    State  Role Designated Bridge      Des Port    Type
------------- ---- ---------- -----  ---- ---------------------- -------- ----------
INTA1            0         0   FWD *
INTA2            0         0   FWD *
INTA4            0         0   FWD *
EXT1           128     20000!  FWD   DESG f001-08:17:f4:76:78:00     801d        P2P
EXT2           128     20000!  FWD   DESG f001-08:17:f4:76:78:00     801e        P2P
EXT3           128     20000!  FWD   ROOT 8000-00:16:ca:a1:c1:00     8011        P2P
EXT4           128     20000!  FWD   DESG f001-08:17:f4:76:78:00     8020        P2P
* = STP turned off for this port.
! = Automatic path cost.
```

```
----------------------------------------------------------------
Spanning Tree Group 10: On (PVRST)
VLANs:  10

Current Root:            Path-Cost  Port Hello MaxAge FwdDel
 600a 00:05:9b:7b:84:3c      990   EXT21    2     20     15

Parameters:  Priority  Hello  MaxAge  FwdDel  Aging   Topology Change Counts
              61450      2      20      15     300                 28

    Port      Prio    Cost    State  Role Designated Bridge      Des Port    Type
------------- ---- ---------- -----  ---- ---------------------- -------- ----------
EXT4           128     20000!  FWD   DESG f00a-08:17:f4:76:78:00     8020        P2P
EXT21 (pc53)   128       990!+ FWD   ROOT 600a-00:05:9b:7b:84:3c     9001        P2P
EXT22 (pc54)   128       990!+ DISC  ALTN 700a-00:0d:ec:a3:8f:bc     9002        P2P
EXT23 (pc54)   128       990!+ DISC  ALTN 700a-00:0d:ec:a3:8f:bc     9002        P2P
EXT24 (pc53)   128       990!+ FWD   ROOT 600a-00:05:9b:7b:84:3c     9001        P2P
! = Automatic path cost.
+ = Portchannel cost, not the individual port cost.

----------------------------------------------------------------
Spanning Tree Group 20: On (PVRST)
VLANs:  20

Current Root:            Path-Cost  Port Hello MaxAge FwdDel
 6014 00:0d:ec:a3:8f:bc      990   EXT22    2     20     15

Parameters:  Priority  Hello  MaxAge  FwdDel  Aging   Topology Change Counts
              61460      2      20      15     300                 20

    Port      Prio    Cost    State  Role Designated Bridge      Des Port    Type
------------- ---- ---------- -----  ---- ---------------------- -------- ----------
EXT4           128     20000!  FWD   DESG f014-08:17:f4:76:78:00     8020        P2P
EXT21 (pc53)   128       990!+ DISC  ALTN 7014-00:05:9b:7b:84:3c     9001        P2P
EXT22 (pc54)   128       990!+ FWD   ROOT 6014-00:0d:ec:a3:8f:bc     9002        P2P
EXT23 (pc54)   128       990!+ FWD   ROOT 6014-00:0d:ec:a3:8f:bc     9002        P2P
EXT24 (pc53)   128       990!+ DISC  ALTN 7014-00:05:9b:7b:84:3c     9001        P2P
! = Automatic path cost.
+ = Portchannel cost, not the individual port cost.

----------------------------------------------------------------
Spanning Tree Group 30: On (PVRST)
VLANs:  30

Current Root:            Path-Cost  Port Hello MaxAge FwdDel
 601e 00:05:9b:7b:84:3c      990   EXT21    2     20     15

Parameters:  Priority  Hello  MaxAge  FwdDel  Aging   Topology Change Counts
              61470      2      20      15     300                 18

    Port      Prio    Cost    State  Role Designated Bridge      Des Port    Type
------------- ---- ---------- -----  ---- ---------------------- -------- ----------
EXT4           128     20000!  FWD   DESG f01e-08:17:f4:76:78:00     8020        P2P
EXT21 (pc53)   128       990!+ FWD   ROOT 601e-00:05:9b:7b:84:3c     9001        P2P
EXT22 (pc54)   128       990!+ DISC  ALTN 701e-00:0d:ec:a3:8f:bc     9002        P2P
EXT23 (pc54)   128       990!+ DISC  ALTN 701e-00:0d:ec:a3:8f:bc     9002        P2P
EXT24 (pc53)   128       990!+ FWD   ROOT 601e-00:05:9b:7b:84:3c     9001        P2P
! = Automatic path cost.
+ = Portchannel cost, not the individual port cost.
```

```
-----------------------------------------------------------------
Spanning Tree Group 40: On (PVRST)
VLANs:  40

Current Root:            Path-Cost  Port Hello MaxAge FwdDel
 6028 00:0d:ec:a3:8f:bc      990   EXT22    2     20     15

Parameters:  Priority  Hello  MaxAge  FwdDel  Aging   Topology Change Counts
              61480      2      20      15     300                 20

    Port      Prio    Cost    State  Role Designated Bridge      Des Port    Type
------------- ---- ---------- -----  ---- ---------------------- -------- ----------
EXT4           128     20000!  FWD   DESG f028-08:17:f4:76:78:00     8020        P2P
EXT21 (pc53)   128       990!+ DISC  ALTN 7028-00:05:9b:7b:84:3c     9001        P2P
EXT22 (pc54)   128       990!+ FWD   ROOT 6028-00:0d:ec:a3:8f:bc     9002        P2P
EXT23 (pc54)   128       990!+ FWD   ROOT 6028-00:0d:ec:a3:8f:bc     9002        P2P
EXT24 (pc53)   128       990!+ DISC  ALTN 7028-00:05:9b:7b:84:3c     9001        P2P
! = Automatic path cost.
+ = Portchannel cost, not the individual port cost.

-----------------------------------------------------------------
Spanning Tree Group 128: Off (PVRST), FDB aging timer 300
VLANs:  4095

    Port      Prio    Cost    State  Role Designated Bridge      Des Port    Type
------------- ---- ---------- -----  ---- ---------------------- -------- ----------
MGT1             0         0   FWD *
*= STP turned off for this port.
```

As shown in Example 4-15 on page 116, Ethernet interfaces EXT21-24 are bundled to channels, in which EXT21 and EXT24 form portchannel 53 and EXT22 and EXT23 form portchannel 54.

4.3.4 Bridge priority field in the show spanning tree output

When STP was first used, there was only one spanning tree per physical switch in which the bridge priority was stored as a 16-bit value (0-65535). With the introduction of per VLAN spanning tree, the need to carry the VLAN ID within the bridge priority field became apparent.

The top 4 bits were still used for the bridge priority value, but the remaining 12 bits were used to carry the VLAN ID (1-1046).

Table 4-1 lists the 16 bits translated to decimal.

Table 4-1 Bridge priority field

Usage	**Bridge priority: 4 bits**				**VLAN ID: 12 bit**											
Bit value	32768	16384	8192	4096	2048	1024	512	256	128	64	32	16	8	4	2	1

If you configure the bridge priority value at Cisco IOS, you must enter a multiple of 4096 or use the keywords root primary or root secondary. If you configure the bridge priority at IBM OS, you can enter any value and the switch changes it to the next lower value that is divisible by 4096. The output of the show spanning tree command is shown in Example 4-16 on page 119 and Example 4-17 on page 120. The important parameters and details are highlighted in red.

Example 4-16 Output of show spanning-tree command

```
str# show spanning-tree

VLAN0001
  Spanning tree enabled protocol rstp
  Root ID    Priority    32769
             Address     0005.9b7b.843c
             This bridge is the root
             Hello Time  2  sec  Max Age 20 sec  Forward Delay 15 sec

VLAN0010
  Spanning tree enabled protocol rstp
  Root ID    Priority    24586
             Address     0005.9b7b.843c
             This bridge is the root

For VLAN 10 and other odd vlans, this bridge is the root


             Hello Time  2  sec  Max Age 20 sec  Forward Delay 15 sec

  Bridge ID  Priority    24586  (priority 24576 sys-id-ext 10)
             Address     0005.9b7b.843c
             Hello Time  2  sec  Max Age 20 sec  Forward Delay 15 sec

Interface        Role Sts Cost      Prio.Nbr Type
---------------- ---- --- --------- -------- --------------------------------
Po1              Desg FWD 1         128.4096 P2p
Po2              Desg FWD 1         128.4097 P2p
Eth1/16          Desg FWD 2         128.144  P2p


VLAN0020
  Spanning tree enabled protocol rstp
  Root ID    Priority    24596
             Address     000d.eca3.8fbc
             Cost        1
             Port        4096 (port-channel1)

For VLAN 20 and other even vlans, Po1 leads to the rootbrigde (Nexus 5000 Vie)

             Hello Time  2  sec  Max Age 20 sec  Forward Delay 15 sec

  Bridge ID  Priority    28692  (priority 28672 sys-id-ext 20)
             Address     0005.9b7b.843c
             Hello Time  2  sec  Max Age 20 sec  Forward Delay 15 sec

Interface        Role Sts Cost      Prio.Nbr Type
---------------- ---- --- --------- -------- --------------------------------
Po1              Root FWD 1         128.4096 P2p
Po2              Desg FWD 1         128.4097 P2p


VLAN0030
  Spanning tree enabled protocol rstp
  Root ID    Priority    24606
             Address     0005.9b7b.843c
             This bridge is the root
             Hello Time  2  sec  Max Age 20 sec  Forward Delay 15 sec
```

```
  Bridge ID  Priority    24606  (priority 24576 sys-id-ext 30)
             Address     0005.9b7b.843c
             Hello Time  2  sec  Max Age 20 sec  Forward Delay 15 sec

Interface        Role Sts Cost      Prio.Nbr Type
---------------- ---- --- --------- -------- --------------------------------
Po1              Desg FWD 1         128.4096 P2p
Po2              Desg FWD 1         128.4097 P2p


VLAN0040
  Spanning tree enabled protocol rstp
  Root ID    Priority    24616
             Address     000d.eca3.8fbc
             Cost        1
             Port        4096 (port-channel1)
             Hello Time  2  sec  Max Age 20 sec  Forward Delay 15 sec

  Bridge ID  Priority    28712  (priority 28672 sys-id-ext 40)
             Address     0005.9b7b.843c
             Hello Time  2  sec  Max Age 20 sec  Forward Delay 15 sec

Interface        Role Sts Cost      Prio.Nbr Type
---------------- ---- --- --------- -------- --------------------------------
Po1              Root FWD 1         128.4096 P2p
Po2              Desg FWD 1         128.4097 P2p
```

Example 4-17 Output from show spanning-tree on VIE switch

```
vie# show spanning-tree

VLAN0001
  Spanning tree enabled protocol rstp
  Root ID    Priority    32769
             Address     0005.9b7b.843c
             Cost        1
             Port        4096 (port-channel1)
             Hello Time  2  sec  Max Age 20 sec  Forward Delay 15 sec

  Bridge ID  Priority    32769  (priority 32768 sys-id-ext 1)
             Address     000d.eca3.8fbc
             Hello Time  2  sec  Max Age 20 sec  Forward Delay 15 sec

Interface        Role Sts Cost      Prio.Nbr Type
---------------- ---- --- --------- -------- --------------------------------
Po1              Root FWD 1         128.4096 P2p


VLAN0010
  Spanning tree enabled protocol rstp
  Root ID    Priority    24586
             Address     0005.9b7b.843c
             Cost        1
             Port        4096 (port-channel1)
             Hello Time  2  sec  Max Age 20 sec  Forward Delay 15 sec

  Bridge ID  Priority    28682  (priority 28672 sys-id-ext 10)
             Address     000d.eca3.8fbc
```

```
             Hello Time  2  sec  Max Age 20 sec  Forward Delay 15 sec

Interface        Role Sts Cost      Prio.Nbr Type
---------------- ---- --- --------- -------- --------------------------------
Po1              Root FWD 1         128.4096 P2p
Po3              Desg FWD 1         128.4098 P2p
Eth1/16          Desg FWD 2         128.144  P2p


VLAN0020
  Spanning tree enabled protocol rstp
  Root ID    Priority    24596
             Address     000d.eca3.8fbc
             This bridge is the root
             Hello Time  2  sec  Max Age 20 sec  Forward Delay 15 sec

  Bridge ID  Priority    24596  (priority 24576 sys-id-ext 20)
             Address     000d.eca3.8fbc
             Hello Time  2  sec  Max Age 20 sec  Forward Delay 15 sec

Interface        Role Sts Cost      Prio.Nbr Type
---------------- ---- --- --------- -------- --------------------------------
Po1              Desg FWD 1         128.4096 P2p
Po3              Desg FWD 1         128.4098 P2p


VLAN0030
  Spanning tree enabled protocol rstp
  Root ID    Priority    24606
             Address     0005.9b7b.843c
             Cost        1
             Port        4096 (port-channel1)
             Hello Time  2  sec  Max Age 20 sec  Forward Delay 15 sec

  Bridge ID  Priority    28702  (priority 28672 sys-id-ext 30)
             Address     000d.eca3.8fbc
             Hello Time  2  sec  Max Age 20 sec  Forward Delay 15 sec

Interface        Role Sts Cost      Prio.Nbr Type
---------------- ---- --- --------- -------- --------------------------------
Po1              Root FWD 1         128.4096 P2p
Po3              Desg FWD 1         128.4098 P2p


VLAN0040
  Spanning tree enabled protocol rstp
  Root ID    Priority    24616
             Address     000d.eca3.8fbc
             This bridge is the root
             Hello Time  2  sec  Max Age 20 sec  Forward Delay 15 sec

  Bridge ID  Priority    24616  (priority 24576 sys-id-ext 40)
             Address     000d.eca3.8fbc
             Hello Time  2  sec  Max Age 20 sec  Forward Delay 15 sec

Interface        Role Sts Cost      Prio.Nbr Type
---------------- ---- --- --------- -------- --------------------------------
Po1              Desg FWD 1         128.4096 P2p
Po3              Desg FWD 1         128.4098 P2p
```

4.3.5 Show running-config of all switches in Use Case 2

In the following configuration print outs of the IBM Flex Switch and the Cisco Nexus switches, you can see the necessary configuration steps that we performed during our test. The important parameters and details are highlighted in red.

The commands that were run on the three switches produced the following outputs:

- Flex System EN2029: Example 4-18
- G8264 STR switch: Example 4-19 on page 124
- G8264 VIE switch: Example 4-20 on page 126

Example 4-18 Output of show running-config command: Flex System switch

```
Flex#sh run
Current configuration:
!
version "7.2.2.2"
switch-type "IBM Flex System EN2092 1Gb Ethernet Scalable Switch"
!
!

…
hostname "Flex"
system idle 60
!
!
access http enable
access telnet enable
!
…
interface port EXT4
        name "TEST_PC"
        tagging
        exit
!
…
interface port EXT21
        name "TO_STR_ETH1/2"
        tagging
        pvid 10
        exit
!
interface port EXT22
        name "TO_VIE_ETH1/1"
        tagging
        pvid 10
        exit
!
interface port EXT23
        name "TO_VIE_ETH1/2"
        tagging
        pvid 10
        exit
!
interface port EXT24
        name "TO_STR_ETH1/1"
        tagging
        pvid 10
        exit
```

```
!
vlan 1
        member INTA1-EXT20
        no member EXT21-EXT24
!
!
vlan 10
        enable
        name "Server"
        member EXT4,EXT21-EXT24
!
!
vlan 20
        enable
        name "Data20"
        member EXT4,EXT21-EXT24
!
!
vlan 30
        enable
        name "Data30"
        member EXT4,EXT21-EXT24
!
!
vlan 40
        enable
        name "Data40"
        member EXT4,EXT21-EXT24
!
!
!
spanning-tree stp 10 vlan 10

spanning-tree stp 20 vlan 20

spanning-tree stp 30 vlan 30

spanning-tree stp 40 vlan 40

!
! This configures the LACP portchannels in the IBM PureFlex switch
!
interface port EXT21
        lacp mode active
        lacp key 2
!
interface port EXT22
        lacp mode active
        lacp key 3
!
interface port EXT23
        lacp mode active
        lacp key 3
!
interface port EXT24
        lacp mode active
        lacp key 2
!
!
!
```

```
!
!
!
lldp enable
!
!
!
!
!
…
end
```

Example 4-19 Output from the show running-config command: STR switch

```
str# show run
version 5.1(3)N2(1)
hostname str

feature telnet
no feature http-server

! Enables LACP
feature lacp
feature lldp

username admin password 5 $1$Oc8ULbm7$bRaCJLmRCrkJRU1DcNaaJO  role network-admin
no password strength-check

…

vrf context management
  ip route 0.0.0.0/0 192.168.240.1
vlan 1
vlan 10
  name Server
vlan 20
  name Data20
vlan 30
  name Data30
vlan 40
  name Data40
spanning-tree vlan 10,30 priority 24576
spanning-tree vlan 20,40 priority 28672


interface port-channel1
  description TO_VIE_PO1
  switchport mode trunk
  switchport access vlan 10
!
!
! Configure Portchannel
!
interface port-channel2
  description TO_FLEX_EXT21,EXT24
  switchport mode trunk
  switchport trunk native vlan 10
  switchport trunk allowed vlan 10,20,30,40
```

```
!
!Configure interface and add it to portchannel2 by use of LACP (keyword = active)
!
interface Ethernet1/1
  description TO_FLEX_EXT24
  switchport mode trunk
  switchport trunk native vlan 10
  switchport trunk allowed vlan 10,20,30,40
  channel-group 2 mode active

interface Ethernet1/2
  description TO_FLEX_EXT21
  switchport mode trunk
  switchport trunk native vlan 10
  switchport trunk allowed vlan 10,20,30,40
  channel-group 2 mode active

…

interface Ethernet1/19
  description TO_VIE_ETH1/39
  switchport mode trunk
  switchport access vlan 10
  channel-group 1 mode active

interface Ethernet1/20
  description TO_VIE_ETH1/40
  switchport mode trunk
  switchport access vlan 10
  channel-group 1 mode active

interface mgmt0
  ip address 192.168.240.30/24
clock timezone MESZ 2 0
line console
line vty
boot kickstart bootflash:/n5000-uk9-kickstart.5.1.3.N2.1.bin
boot system bootflash:/n5000-uk9.5.1.3.N2.1.bin
```

Example 4-20 Output of show running-config command: VIE switch

```
vie# show run

version 5.1(3)N2(1)
hostname vie

feature telnet
feature lacp
feature

username admin password 5 $1$3QkdUbKB$s1Ytem8Ty6FfYtQc9ZsOk1  role network-admin
no password strength-check

…

vrf context management
  ip route 0.0.0.0/0 192.168.240.1
vlan 1
vlan 10
  name Server
vlan 20
  name Data20
vlan 30
  name Data30
vlan 40
  name Data40
spanning-tree vlan 10,30 priority 28672
spanning-tree vlan 20,40 priority 24576


interface port-channel1
  description TO_STR_PO1
  switchport mode trunk
  switchport access vlan 10

!Configure interface and add it to portchannel3 by use of LACP (keyword = active)

interface port-channel3
  description TO_FLEX_EXT22,EXT23
  switchport mode trunk
  switchport trunk native vlan 10
  switchport trunk allowed vlan 10,20,30,40

interface Ethernet1/1
  description TO_FLEX_EXT22
  switchport mode trunk
  switchport trunk native vlan 10
  switchport trunk allowed vlan 10,20,30,40
  channel-group 3 mode active

interface Ethernet1/2
  description TO_FLEX_EXT23
  switchport mode trunk
  switchport trunk native vlan 10
  switchport trunk allowed vlan 10,20,30,40
  channel-group 3 mode active

…

interface Ethernet1/39
```

```
  description TO_STR_ETH1/19
  switchport mode trunk
  switchport access vlan 10
  channel-group 1 mode active

interface Ethernet1/40
  description TO_STR_ETH1/19
  switchport mode trunk
  switchport access vlan 10
  channel-group 1 mode active

…

interface mgmt0
  no snmp trap link-status
  vrf member management
  ip address 192.168.240.20/24
clock timezone MESZ 2 0
line console
line vty
boot kickstart bootflash:/n5000-uk9-kickstart.5.1.3.N2.1.bin
boot system bootflash:/n5000-uk9.5.1.3.N2.1.bin
```

4.4 Use Case 3: MST with LACP Channeling

In this use case, we configured MST instead of PVRST as the spanning tree option with LACP channeling, as shown in Figure 4-7.

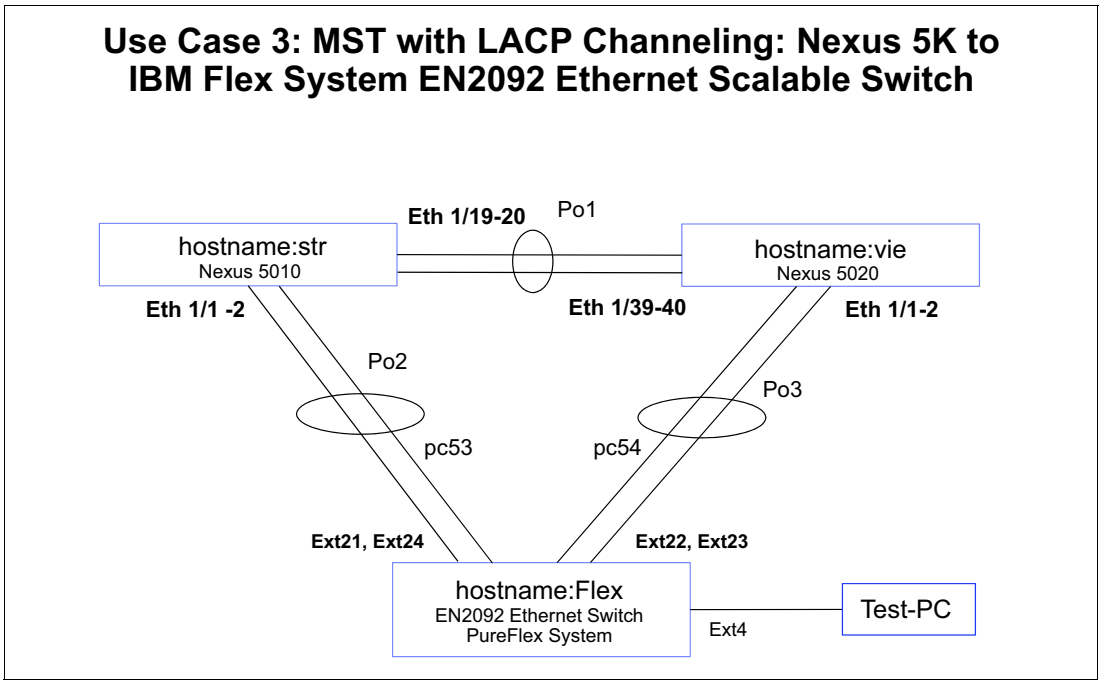

Figure 4-7 Use Case 3: MST with LACP Channeling

4.4.1 Verifying the topology used by using lldp

As in the other use cases, we verified the configurations by using several show commands on the IBM and on the Cisco switches.

A best practice to verify the topology is the use of the **show lldp remote-device** command on the IBM Flex switch and the **show lldp neighbors** command on the Cisco Nexus switch. First, we verified the topology after the configuration changes were made, as shown in Example 4-21.

Example 4-21 Verifying the configurations

```
Flex#sh lldp remote-device
LLDP Remote Devices Information

LocalPort | Index | Remote Chassis ID         | Remote Port          | Remote System Name
----------|-------|--------------------------|----------------------|--------------------
EXT22     | 1     | 00 0d ec a3 8f 88        | Eth1/1               | vie
EXT24     | 2     | 00 05 9b 7b 84 08        | Eth1/1               | str
INTA1     | 3     | 5c f3 fc 5f 43 9d        | 5c-f3-fc-5f-43-9d    |
EXT21     | 4     | 00 05 9b 7b 84 09        | Eth1/2               | str
EXT23     | 5     | 00 0d ec a3 8f 89        | Eth1/2               | vie

str# show lldp neighbors
Capability codes:
  (R) Router, (B) Bridge, (T) Telephone, (C) DOCSIS Cable Device
  (W) WLAN Access Point, (P) Repeater, (S) Station, (O) Other
Device ID            Local Intf      Hold-time  Capability  Port ID
Flex                 Eth1/1          120        BR          52
Flex                 Eth1/2          120        BR          49
vie                  Eth1/19         120        B           Eth1/39
vie                  Eth1/20         120        B           Eth1/40
Total entries displayed: 4

vie# show lldp neighbors
Capability codes:
  (R) Router, (B) Bridge, (T) Telephone, (C) DOCSIS Cable Device
  (W) WLAN Access Point, (P) Repeater, (S) Station, (O) Other
Device ID            Local Intf      Hold-time  Capability  Port ID
Flex                 Eth1/1          120        BR          50
Flex                 Eth1/2          120        BR          51
str                  Eth1/39         120        B           Eth1/19
str                  Eth1/40         120        B           Eth1/20
Total entries displayed: 4
```

4.4.2 Verifying trunks

To verify which VLANs are active on which trunk, we used the **show interface trunk** command on the IBM Flex System switch and the Cisco Nexus switch, as shown in Example 4-22. Important parameters and details are highlighted in red.

Example 4-22 Reviewing active VLANs and trunks

```
Flex#show interface trunk
Alias   Port Tag RMON Lrn Fld PVID       NAME                 VLAN(s)
------- ---- --- ---- --- --- ----- -------------- -------------------------------
...
EXT4    32    y   d    e   e     1  TEST_PC        1 10 20 30 40
...
```

```
EXT21   49    y   d    e   e    10  TO_STR_ETH1/2  10 20 30 40
EXT22   50    y   d    e   e    10  TO_VIE_ETH1/1  10 20 30 40
EXT23   51    y   d    e   e    10  TO_VIE_ETH1/2  10 20 30 40
EXT24   52    y   d    e   e    10  TO_STR_ETH1/1  10 20 30 40
MGT1    53    y   d    e   e  4095  MGT1           4095


str# show interface trunk

--------------------------------------------------------------------------------
Port          Native  Status        Port
              Vlan                  Channel
--------------------------------------------------------------------------------
Eth1/1        10      trnk-bndl     Po2
Eth1/2        10      trnk-bndl     Po2
Eth1/19       1       trnk-bndl     Po1
Eth1/20       1       trnk-bndl     Po1
Po1           1       trunking      --
Po2           10      trunking      --

--------------------------------------------------------------------------------
Port          Vlans Allowed on Trunk
--------------------------------------------------------------------------------
Eth1/1        10,20,30,40
Eth1/2        10,20,30,40
Eth1/19       1-3967,4048-4093
Eth1/20       1-3967,4048-4093
Po1           1-3967,4048-4093
Po2           10,20,30,40

--------------------------------------------------------------------------------
Port          Vlans Err-disabled on Trunk
--------------------------------------------------------------------------------
Eth1/1        none
Eth1/2        none
Eth1/19       none
Eth1/20       none
Po1           none
Po2           none

--------------------------------------------------------------------------------
Port          STP Forwarding
--------------------------------------------------------------------------------
Eth1/1        none
Eth1/2        none
Eth1/19       none
Eth1/20       none
Po1           1,10,20,30,40
Po2           10,30

--------------------------------------------------------------------------------
Port          Vlans in spanning tree forwarding state and not pruned
--------------------------------------------------------------------------------
Eth1/1        --
Eth1/2        --
Eth1/19       --
Eth1/20       --
Po1           --
Po2           --
```

```
--------------------------------------------------------------------------------
Port          Vlans Forwarding on FabricPath
--------------------------------------------------------------------------------

vie# show interface trunk

--------------------------------------------------------------------------------
Port          Native  Status        Port
              Vlan                  Channel
--------------------------------------------------------------------------------
Eth1/1        10      trnk-bndl     Po3
Eth1/2        10      trnk-bndl     Po3
Eth1/39       1       trnk-bndl     Po1
Eth1/40       1       trnk-bndl     Po1
Po1           1       trunking      --
Po3           10      trunking      --

--------------------------------------------------------------------------------
Port          Vlans Allowed on Trunk
--------------------------------------------------------------------------------
Eth1/1        10,20,30,40
Eth1/2        10,20,30,40
Eth1/39       1-3967,4048-4093
Eth1/40       1-3967,4048-4093
Po1           1-3967,4048-4093
Po3           10,20,30,40

--------------------------------------------------------------------------------
Port          Vlans Err-disabled on Trunk
--------------------------------------------------------------------------------
Eth1/1        none
Eth1/2        none
Eth1/39       none
Eth1/40       none
Po1           none
Po3           none

--------------------------------------------------------------------------------
Port          STP Forwarding
--------------------------------------------------------------------------------
Eth1/1        none
Eth1/2        none
Eth1/39       none
Eth1/40       none
Po1           1,10,20,30,40
Po3           20,40

--------------------------------------------------------------------------------
Port          Vlans in spanning tree forwarding state and not pruned
--------------------------------------------------------------------------------
Eth1/1        --
Eth1/2        --
Eth1/39       --
Eth1/40       --
Po1           --
Po3           --
```

Figure 4-8 shows the odd-numbered VLANs. Figure 4-9 shows the even-numbered VLANs.

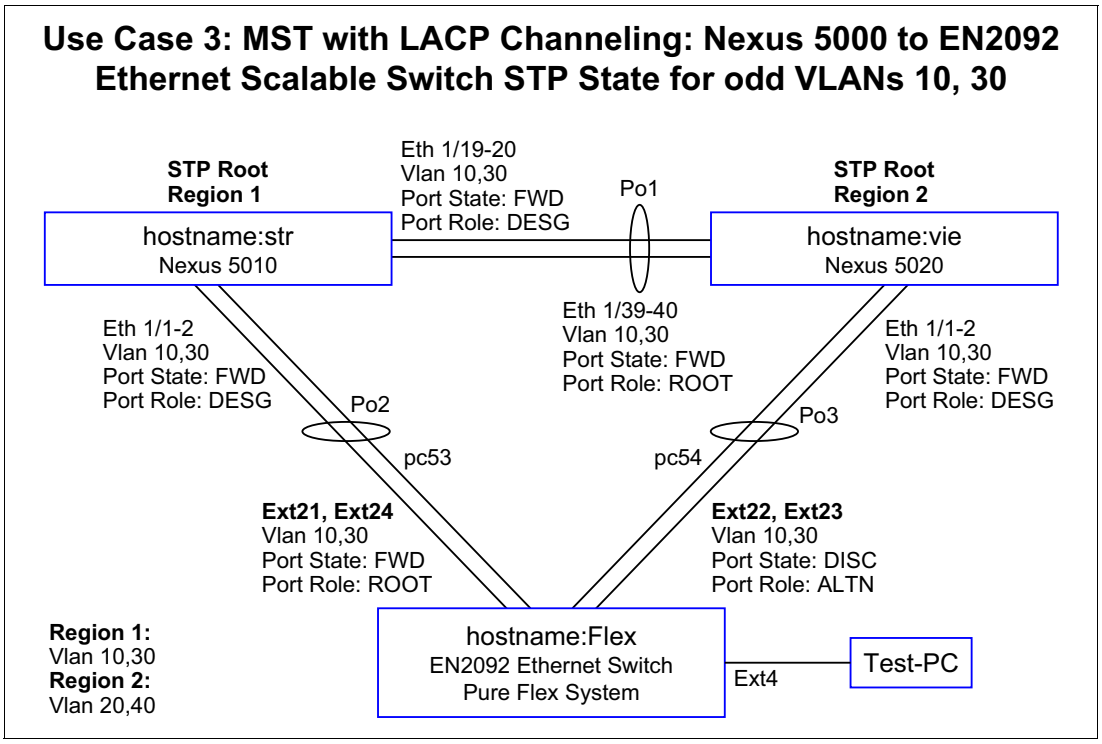

Figure 4-8 Use Case 3: VLANs 10, 30

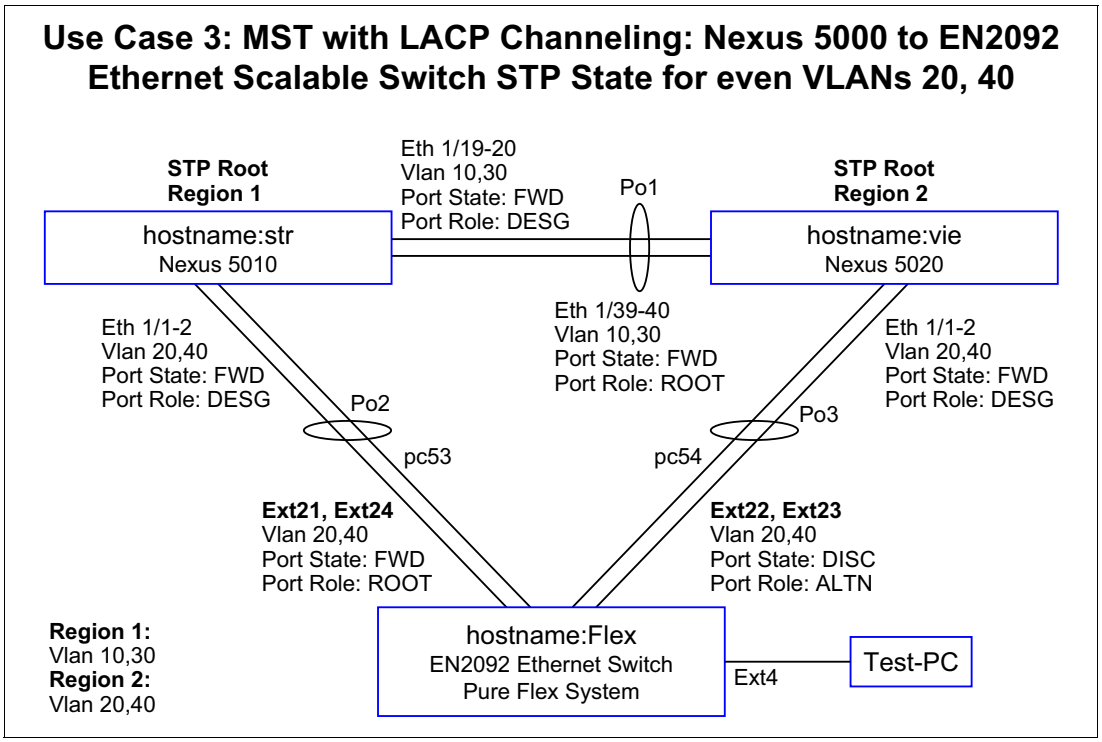

Figure 4-9 Use Case 3: VLANs 20, 40

4.4.3 Verifying MST spanning tree configuration

In the following configuration print outs of the IBM Flex System switch and the Cisco Nexus switches, you can see the necessary configuration steps that we performed during our test. We also add some remarks to help explain the configuration that was used.

The commands that were run on the three switches produced the following outputs:

- Flex System EN2029: Example 4-23
- G8264 STR switch: Example 4-24 on page 133
- G8264 VIE switch: Example 4-25 on page 134

The important parameters and details are highlighted in red. As you can see highlighted in red, MST is enabled on all MST instances on both Nexus switches.

Example 4-23 Output of show spanning-tree command: Flex System switch

```
Flex#sh spanning-tree
-----------------------------------------------------------------
Pvst+ compatibility mode enabled

Mstp Digest: 0xe821ccee7501115289b37c79a72e07c9

-----------------------------------------------------------------
Spanning Tree Group 1: On (MSTP)
VLANs MAPPED:  10 30
VLANs:  10 30

! Now spanning-tree protocol is MST for odd vlans 10 and 30

Current Root:            Path-Cost  Port
 6000 00:05:9b:7b:84:3c      990   EXT21

Parameters:  Priority  Aging   Topology Change Counts
              61440     300                  2

    Port      Prio    Cost    State  Role Designated Bridge      Des Port    Type
------------- ---- ---------- -----  ---- ---------------------- -------- ----------
EXT4           128     20000!  FWD   DESG f000-08:17:f4:76:78:00     8020        P2P
EXT21 (pc53)   128       990!+ FWD   ROOT 6000-00:05:9b:7b:84:3c     9001        P2P
EXT22 (pc54)   128       990!+ FWD   DESG f000-08:17:f4:76:78:00     806b        P2P
EXT23 (pc54)   128       990!+ FWD   DESG f000-08:17:f4:76:78:00     806b        P2P
EXT24 (pc53)   128       990!+ FWD   ROOT 6000-00:05:9b:7b:84:3c     9001        P2P

! EXT 21 – 24 are portchannels. EXT21 and EXT24 formed portchannel 53, EXT 21 and EXT23
! formed portchannel 54.

! = Automatic path cost.
+ = Portchannel cost, not the individual port cost.

-----------------------------------------------------------------
Spanning Tree Group 2: On (MSTP)
VLANs MAPPED:  20 40
VLANs:  20 40
! Now spanning-tree protocol is MST for even vlans 20 and 40

Current Root:            Path-Cost  Port
 6000 00:0d:ec:a3:8f:bc      990   EXT22

Parameters:  Priority  Aging   Topology Change Counts
```

```
              61440     300                  1

    Port      Prio    Cost    State  Role Designated Bridge      Des Port    Type
------------- ---- ---------- -----  ---- ---------------------- -------- ----------
EXT4           128     20000!  FWD   DESG f000-08:17:f4:76:78:00     8020        P2P
EXT21 (pc53)   128       990!+ FWD   DESG f000-08:17:f4:76:78:00     806a        P2P
EXT22 (pc54)   128       990!+ FWD   ROOT 6000-00:0d:ec:a3:8f:bc     9002        P2P
EXT23 (pc54)   128       990!+ FWD   ROOT 6000-00:0d:ec:a3:8f:bc     9002        P2P
EXT24 (pc53)   128       990!+ FWD   DESG f000-08:17:f4:76:78:00     806a        P2P
! EXT 21 – 24 are portchannels. EXT21 and EXT24 formed portchannel 53, EXT 21 and EXT23
! formed portchannel 54.


! = Automatic path cost.
+ = Portchannel cost, not the individual port cost.
```

Example 4-24 Output of show spanning-tree command: STR switch

```
str# show spanning-tree

MST0000
  Spanning tree enabled protocol mstp
  Root ID    Priority    32768
             Address     0005.9b7b.843c
             This bridge is the root
             Hello Time  2  sec  Max Age 20 sec  Forward Delay 15 sec

  Bridge ID  Priority    32768  (priority 32768 sys-id-ext 0)
             Address     0005.9b7b.843c
             Hello Time  2  sec  Max Age 20 sec  Forward Delay 15 sec

Interface        Role Sts Cost      Prio.Nbr Type
---------------- ---- --- --------- -------- --------------------------------
Po1              Desg FWD 1000      128.4096 P2p
Po2              Desg FWD 1000      128.4097 P2p
Eth1/16          Desg FWD 2000      128.144  P2p


MST0001
  Spanning tree enabled protocol mstp
  Root ID    Priority    24577
             Address     0005.9b7b.843c
             This bridge is the root
             Hello Time  2  sec  Max Age 20 sec  Forward Delay 15 sec

  Bridge ID  Priority    24577  (priority 24576 sys-id-ext 1)
             Address     0005.9b7b.843c
             Hello Time  2  sec  Max Age 20 sec  Forward Delay 15 sec

Interface        Role Sts Cost      Prio.Nbr Type
---------------- ---- --- --------- -------- --------------------------------
Po1              Desg FWD 1000      128.4096 P2p
Po2              Desg FWD 1000      128.4097 P2p
Eth1/16          Desg FWD 2000      128.144  P2p


MST0002
  Spanning tree enabled protocol mstp
```

```
  Root ID    Priority    24578
             Address     000d.eca3.8fbc
             Cost        1000
             Port        4096 (port-channel1)
             Hello Time  2  sec  Max Age 20 sec  Forward Delay 15 sec

  Bridge ID  Priority    32770  (priority 32768 sys-id-ext 2)
             Address     0005.9b7b.843c
             Hello Time  2  sec  Max Age 20 sec  Forward Delay 15 sec

Interface        Role Sts Cost      Prio.Nbr Type
---------------- ---- --- --------- -------- --------------------------------
Po1              Root FWD 1000      128.4096 P2p
Po2              Altn BLK 1000      128.4097 P2p
```

Example 4-25 Output of show spanning-tree command: VIE switch

```
vie# show spanning-tree


MST0000
  Spanning tree enabled protocol mstp
  Root ID    Priority    32768
             Address     0005.9b7b.843c
             Cost        0
             Port        4096 (port-channel1)
             Hello Time  2  sec  Max Age 20 sec  Forward Delay 15 sec

  Bridge ID  Priority    32768  (priority 32768 sys-id-ext 0)
             Address     000d.eca3.8fbc
             Hello Time  2  sec  Max Age 20 sec  Forward Delay 15 sec

Interface        Role Sts Cost      Prio.Nbr Type
---------------- ---- --- --------- -------- --------------------------------
Po1              Root FWD 1000      128.4096 P2p
Po3              Altn BLK 1000      128.4098 P2p
Eth1/16          Desg FWD 2000      128.144  P2p


MST0001
  Spanning tree enabled protocol mstp
  Root ID    Priority    24577
             Address     0005.9b7b.843c
             Cost        1000
             Port        4096 (port-channel1)
             Hello Time  2  sec  Max Age 20 sec  Forward Delay 15 sec

  Bridge ID  Priority    32769  (priority 32768 sys-id-ext 1)
             Address     000d.eca3.8fbc
             Hello Time  2  sec  Max Age 20 sec  Forward Delay 15 sec

Interface        Role Sts Cost      Prio.Nbr Type
---------------- ---- --- --------- -------- --------------------------------
Po1              Root FWD 1000      128.4096 P2p
Po3              Altn BLK 1000      128.4098 P2p
Eth1/16          Desg FWD 2000      128.144  P2p
```

```
MST0002
  Spanning tree enabled protocol mstp
  Root ID    Priority    24578
             Address     000d.eca3.8fbc
             This bridge is the root
             Hello Time  2  sec  Max Age 20 sec  Forward Delay 15 sec

  Bridge ID  Priority    24578  (priority 24576 sys-id-ext 2)
             Address     000d.eca3.8fbc
             Hello Time  2  sec  Max Age 20 sec  Forward Delay 15 sec

Interface        Role Sts Cost      Prio.Nbr Type
---------------- ---- --- --------- -------- --------------------------------
Po1              Desg FWD 1000      128.4096 P2p
Po3              Desg FWD 1000      128.4098 P2p
```

4.4.4 Show running-config of all switches in Use Case 3

In the following configuration print outs of the IBM Flex System switch and the Cisco Nexus switches, you can see the necessary configuration steps that we performed during our test.

The commands that were run on the three switches produced the following outputs:

- Flex System EN2029: Example 4-26
- G8264 STR switch: Example 4-27 on page 137
- G8264 VIE switch: Example 4-28 on page 139

The important parameters and details are highlighted in red.

Example 4-26 Output of show running-config command: Flex System switch

```
Flex#sh running-config
Current configuration:
!
version "7.2.2.2"
switch-type "IBM Flex System EN2092 1Gb Ethernet Scalable Switch"
!
!
...

hostname "Flex"
system idle 60
!
!
access http enable
access telnet enable
!
…
interface port EXT4
        name "TEST_PC"
        tagging
        exit
!
…
interface port EXT21
        name "TO_STR_ETH1/2"
        tagging
        pvid 10
        exit
```

```
!
interface port EXT22
        name "TO_VIE_ETH1/1"
        tagging
        pvid 10
        exit
!
interface port EXT23
        name "TO_VIE_ETH1/2"
        tagging
        pvid 10
        exit
!
interface port EXT24
        name "TO_STR_ETH1/1"
        tagging
        pvid 10
        exit
!
vlan 1
        member INTA1-EXT20
        no member EXT21-EXT24
!
!
vlan 10
        enable
        name "Server"
        member EXT4,EXT21-EXT24
!
!
vlan 20
        enable
        name "Data20"
        member EXT4,EXT21-EXT24
!
!
vlan 30
        enable
        name "Data30"
        member EXT4,EXT21-EXT24
!
!
vlan 40
        enable
        name "Data40"
        member EXT4,EXT21-EXT24
!
! Configuration Part to enable MST on the PureFlex Switch
!
spanning-tree mstp version 10
spanning-tree mstp name "PureFlex"
spanning-tree mode mst
spanning-tree mstp cist-add-vlan 1
spanning-tree mstp cist-add-vlan 4095
!
! For odd vlans 10 and 30 we had to configure stp group 1
!
spanning-tree stp 1 vlan 10
spanning-tree stp 1 vlan 30
!
```

```
! For even vlans 20 and 40 we had to configure stp group 2

!
spanning-tree stp 2 vlan 20
spanning-tree stp 2 vlan 40


!
interface port EXT21
        lacp mode active
        lacp key 2
!
interface port EXT22
        lacp mode active
        lacp key 3
!
interface port EXT23
        lacp mode active
        lacp key 3
!
interface port EXT24
        lacp mode active
        lacp key 2
!
!
!
!
!
!
lldp enable
!
!
!
!
!
…
end
```

Example 4-27 Output of show running-config command: STR switch

```
str# show run

version 5.1(3)N2(1)
hostname str

feature telnet
no feature http-server
feature lacp
feature lldp

username admin password 5 $1$Oc8ULbm7$bRaCJLmRCrkJRU1DcNaaJO  role network-admin
no password strength-check

vrf context management
  ip route 0.0.0.0/0 192.168.240.1
vlan 1
vlan 10
  name Server
```

```
vlan 20
  name Data20
vlan 30
  name Data30
vlan 40
  name Data40
!
! On the Cisco Nexus switch configuration is slightly different. One the str Nexus
spanning-tree ! priority for odd vlan 10 and 10 are lower than for the even vlan 20 and 40.
This has to be vice ! versa on the vie Nexus Switch. Furthermore you have to define a name
for the MST domain.
!
spanning-tree mode mst
spanning-tree mst 1 priority 24576
spanning-tree vlan 10,30 priority 24576
spanning-tree vlan 20,40 priority 28672
spanning-tree mst configuration
  name PureFlex
  revision 10
  instance 1 vlan 10,30
  instance 2 vlan 20,40


interface port-channel1
  description TO_VIE_PO1
  switchport mode trunk
  switchport access vlan 10

interface port-channel2
  description TO_FLEX_EXT21,EXT24
  switchport mode trunk
  switchport trunk native vlan 10
  switchport trunk allowed vlan 10,20,30,40

interface Ethernet1/1
  description TO_FLEX_EXT24
  switchport mode trunk
  switchport trunk native vlan 10
  switchport trunk allowed vlan 10,20,30,40
  channel-group 2 mode active

interface Ethernet1/2
  description TO_FLEX_EXT21
  switchport mode trunk
  switchport trunk native vlan 10
  switchport trunk allowed vlan 10,20,30,40
  channel-group 2 mode active

…

interface Ethernet1/19
  description TO_VIE_ETH1/39
  switchport mode trunk
  switchport access vlan 10
  channel-group 1 mode active

interface Ethernet1/20
  description TO_VIE_ETH1/40
  switchport mode trunk
  switchport access vlan 10
```

```
  channel-group 1 mode active

interface mgmt0
  ip address 192.168.240.30/24
clock timezone MESZ 2 0
line console
line vty
boot kickstart bootflash:/n5000-uk9-kickstart.5.1.3.N2.1.bin
boot system bootflash:/n5000-uk9.5.1.3.N2.1.bin
```

Example 4-28 Output of show running-config command: VIE switch

```
vie# show run

version 5.1(3)N2(1)
hostname vie

feature telnet
feature lacp
feature lldp

username admin password 5 $1$3QkdUbKB$s1Ytem8Ty6FfYtQc9Zs0k1  role network-admin
no password strength-check
…


vrf context management
  ip route 0.0.0.0/0 192.168.240.1
vlan 1
vlan 10
  name Server
vlan 20
  name Data20
vlan 30
  name Data30
vlan 40
  name Data40
!
! On the Cisco Nexus switch configuration is slightly different. One the vie Nexus
spanning-tree ! priority for even vlan 20 and 40 are lower than for odd vlan 10 and 30.
This has to be vice    ! versa on the vie Nexus Switch. Furthermore you have to define a
name for the MST domain.
!
spanning-tree mode mst
spanning-tree mst 2 priority 24576
spanning-tree vlan 10,30 priority 28672
spanning-tree vlan 20,40 priority 24576
spanning-tree mst configuration
  name PureFlex
  revision 10
  instance 1 vlan 10,30
  instance 2 vlan 20,40


interface port-channel1
  description TO_STR_PO1
  switchport mode trunk
  switchport access vlan 10
```

```
interface port-channel3
  description TO_FLEX_EXT22,EXT23
  switchport mode trunk
  switchport access vlan 10
  switchport trunk native vlan 10
  switchport trunk allowed vlan 10,20,30,40

interface Ethernet1/1
  description TO_FLEX_EXT22
  switchport mode trunk
  switchport access vlan 10
  switchport trunk native vlan 10
  switchport trunk allowed vlan 10,20,30,40
  channel-group 3 mode active

interface Ethernet1/2
  description TO_FLEX_EXT23
  switchport mode trunk
  switchport access vlan 10
  switchport trunk native vlan 10
  switchport trunk allowed vlan 10,20,30,40
  channel-group 3 mode active


interface Ethernet1/39
  description TO_STR_ETH1/19
  switchport mode trunk
  switchport access vlan 10
  channel-group 1 mode active

interface Ethernet1/40
  description TO_STR_ETH1/19
  switchport mode trunk
  switchport access vlan 10
  channel-group 1 mode active

…

interface mgmt0
  no snmp trap link-status
  vrf member management
  ip address 192.168.240.20/24
clock timezone MESZ 2 0
line console
line vty
boot kickstart bootflash:/n5000-uk9-kickstart.5.1.3.N2.1.bin
boot system bootflash:/n5000-uk9.5.1.3.N2.1.bin
```

4.5 Use Case 4: MST with LACP Channeling and vPC

To reach our goal of eliminating the spanning tree, we configured vPC on the Nexus 5000 switches. In this case, MST is still enabled. Multiple physical connections between the switches are still channeled by using LACP, as shown in Figure 4-10.

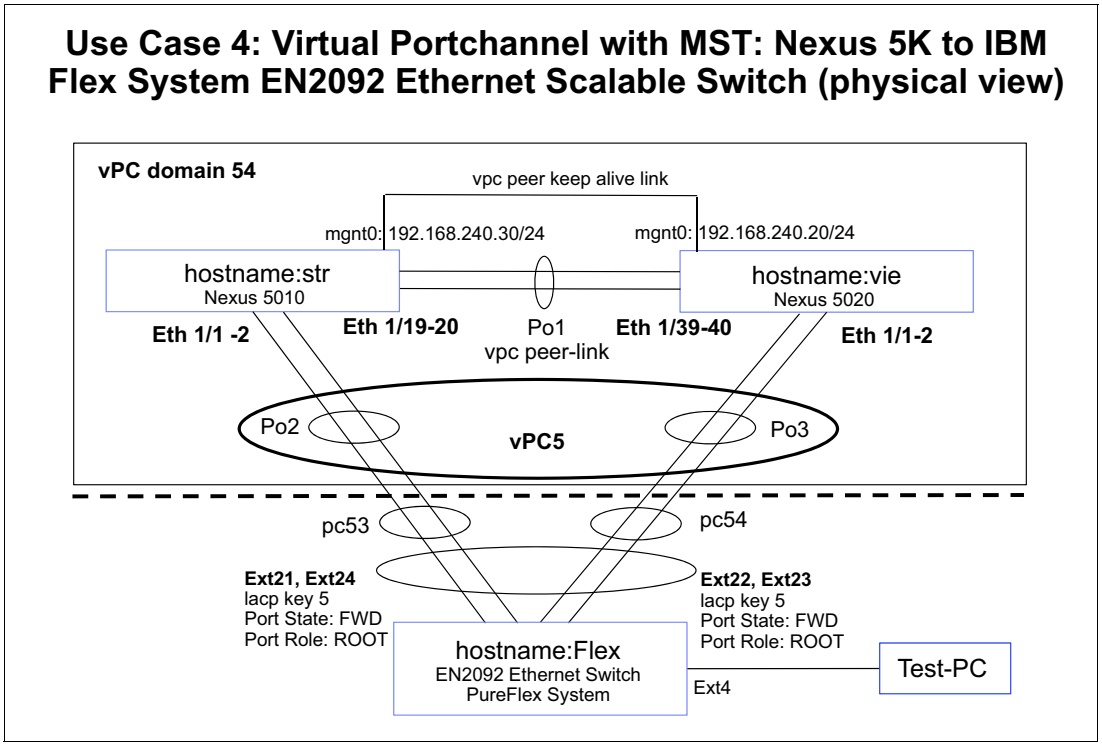

Figure 4-10 Use Case 4: MST with LACP Channeling and vPC

4.5.1 Configuring vPC on STR

To configure vPC, the two Nexus 5000 switches are configured with a vPC peer link in between.

To avoid an active-active scenario if there is a failure, a vPC peer keep-alive link is configured. The MGMT Interfaces are directly connected to the out-of-band keep-alive link. The interface that forms the channel across the Nexus 5000 switches must use the same vPC number on both Nexus 5000 switches (vPC 5 in this case), as shown in Example 4-29 on page 142. The important parameters and details are highlighted in red.

Example 4-29 Use Case 4: vPC Config on STR

```
vpc domain 54
  peer-keepalive destination 192.168.240.20 source 192.168.240.30


interface port-channel1
  description TO_VIE_PO1
  switchport mode trunk
  switchport access vlan 10
  spanning-tree port type network
  vpc peer-link

interface port-channel2
  description TO_FLEX_EXT21,EXT24
  switchport mode trunk
  switchport access vlan 10
  switchport trunk native vlan 10
  switchport trunk allowed vlan 10,20,30,40
  vpc 5

interface Ethernet1/1
  description TO_FLEX_EXT24
  switchport mode trunk
  switchport access vlan 10
  switchport trunk native vlan 10
  switchport trunk allowed vlan 10,20,30,40
  channel-group 2 mode active

interface Ethernet1/2
  description TO_FLEX_EXT21
  switchport mode trunk
  switchport access vlan 10
  switchport trunk native vlan 10
  switchport trunk allowed vlan 10,20,30,40
  channel-group 2 mode active

…

interface Ethernet1/19
  description TO_VIE_ETH1/39
  switchport mode trunk
  switchport access vlan 10
  channel-group 1 mode active

interface Ethernet1/20
  description TO_VIE_ETH1/40
  switchport mode trunk
  switchport access vlan 10
  channel-group 1 mode active

interface mgmt0
  ip address 192.168.240.30/24
```

4.5.2 Configuring MST on the STR

The commands that are shown in Example 4-30 were used to configure MST on the STR switch.

Example 4-30 Use Case 4: MST Config STR

```
spanning-tree mode mst
spanning-tree mst 1 priority 24576
spanning-tree vlan 10,30 priority 24576
spanning-tree vlan 20,40 priority 28672
spanning-tree mst configuration
  name PureFlex
  revision 10
  instance 1 vlan 10,30
  instance 2 vlan 20,40
```

4.5.3 Configuring vPC on VIE

The commands that are shown Example 4-31 were used to configure vPC on the VIE switch. The important parameters and details are highlighted in red.

Example 4-31 Use Case 4: vPC Config VIE

```
vpc domain 54
  peer-keepalive destination 192.168.240.30 source 192.168.240.20


interface port-channel1
  description TO_STR_PO1
  switchport mode trunk
  switchport access vlan 10
  spanning-tree port type network
  vpc peer-link

interface port-channel3
  description TO_FLEX_EXT22,EXT23
  switchport mode trunk
  switchport access vlan 10
  switchport trunk native vlan 10
  switchport trunk allowed vlan 10,20,30,40
  vpc 5

interface Ethernet1/1
  description TO_FLEX_EXT22
  switchport mode trunk
  switchport access vlan 10
  switchport trunk native vlan 10
  switchport trunk allowed vlan 10,20,30,40
  channel-group 3 mode active

interface Ethernet1/2
  description TO_FLEX_EXT23
  switchport mode trunk
  switchport access vlan 10
  switchport trunk native vlan 10
  switchport trunk allowed vlan 10,20,30,40
channel-group 3 mode active
```

```
…

interface Ethernet1/39
  description TO_STR_ETH1/19
  switchport mode trunk
  switchport access vlan 10
  channel-group 1 mode active

interface Ethernet1/40
  description TO_STR_ETH1/19
  switchport mode trunk
  switchport access vlan 10
  channel-group 1 mode active
…
interface mgmt0
  no snmp trap link-status
  vrf member management
  ip address 192.168.240.20/24
```

4.5.4 Configuring MST on VIE

The commands that are shown Example 4-32 were used to configure MST on the VIE switch.

Example 4-32 Use Case 4: MST Config VIE

```
spanning-tree mode mst
spanning-tree mst 2 priority 24576
spanning-tree vlan 10,30 priority 28672
spanning-tree vlan 20,40 priority 24576
spanning-tree mst configuration
  name PureFlex
  revision 10
  instance 1 vlan 10,30
  instance 2 vlan 20,40
```

4.5.5 Reviewing the Flex System switch configuration

The Flex System switch is unaware of vPC. The EN2092, like any end system, sees only one Nexus switch, as shown in Example 4-33.

Example 4-33 Use Case 4: Flex System switch

```
interface port EXT21
        name "TO_STR_ETH1/2"
        tagging
        pvid 10
        exit
!
interface port EXT22
        name "TO_VIE_ETH1/1"
        tagging
        pvid 10
        exit
!
interface port EXT23
        name "TO_VIE_ETH1/2"
        tagging
        pvid 10
        exit
!
interface port EXT24
        name "TO_STR_ETH1/1"
        tagging
        pvid 10
        exit
!
…
!
interface port EXT21
        lacp mode active
        lacp key 5
!
interface port EXT22
        lacp mode active
        lacp key 5
!
interface port EXT23
        lacp mode active
        lacp key 5
!
interface port EXT24
        lacp mode active
        lacp key 5
!
```

4.5.6 Configuring MST on the Flex System switch

The commands that are shown Example 4-34 were used to configure MST on the Flex System switch.

Example 4-34 Use Case 4: MST Config Flex

```
spanning-tree mstp version 10
spanning-tree mstp name "PureFlex"
spanning-tree mode mst
spanning-tree mstp cist-add-vlan 1
spanning-tree mstp cist-add-vlan 4095
!
spanning-tree stp 1 vlan 10
spanning-tree stp 1 vlan 30

spanning-tree stp 2 vlan 20
spanning-tree stp 2 vlan 40
```

4.5.7 Logical view

Figure 4-11 shows the logical view of the setup. To the end system (the IBM Flex System switch), the two Cisco Nexus 5000 switches looks like one switch.

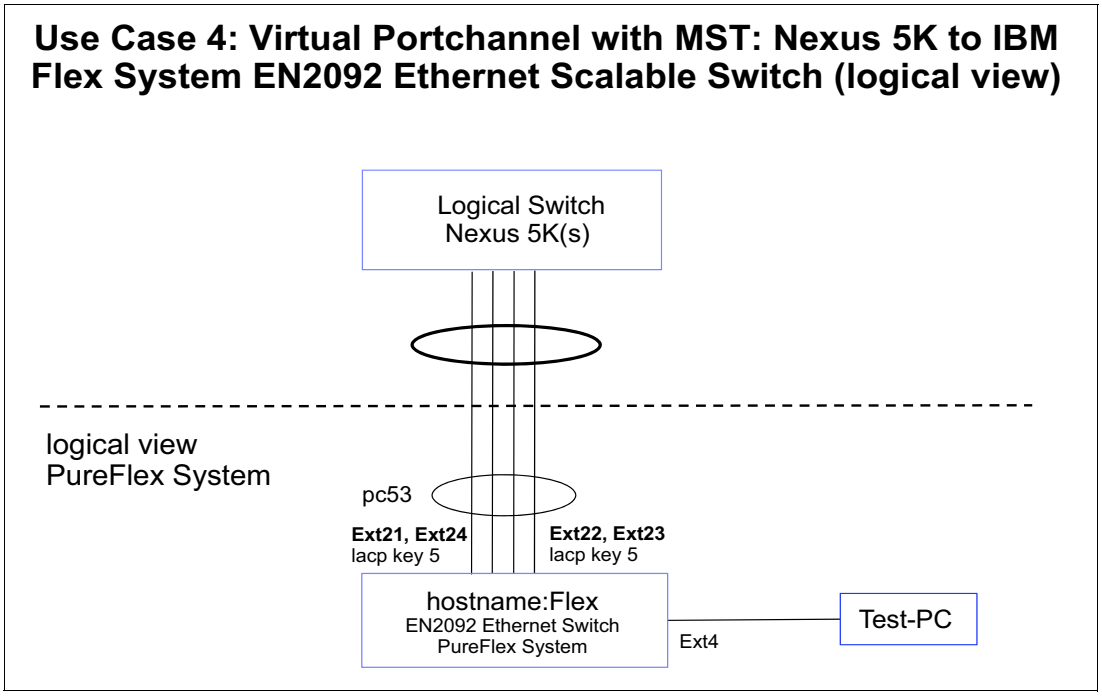

Figure 4-11 Use Case 4: Logical view

4.5.8 Verifying the configuration

We used the **show** commands that are shown in Example 4-35 to verify the vPC configuration that was used on the Nexus 5000 switches. The output helps visualize the setup. The important parameters and details are highlighted in red.

Example 4-35 Use Case 4: Verify the configuration

```
str# show vpc peer-keepalive

vPC keep-alive status           : peer is alive
--Peer is alive for             : (3417) seconds, (551) msec
--Send status                   : Success
--Last send at                  : 2012.05.23 19:14:17 134 ms
--Sent on interface             : mgmt0
--Receive status                : Success
--Last receive at               : 2012.05.23 19:14:16 992 ms
--Received on interface         : mgmt0
--Last update from peer         : (0) seconds, (753) msec

vPC Keep-alive parameters
--Destination                   : 192.168.240.20
--Keepalive interval            : 1000 msec
--Keepalive timeout             : 5 seconds
--Keepalive hold timeout        : 3 seconds
--Keepalive vrf                 : management
--Keepalive udp port            : 3200
--Keepalive tos                 : 192

str# show vpc brief
Legend:
                (*) - local vPC is down, forwarding via vPC peer-link

vPC domain id                   : 54
Peer status                     : peer adjacency formed ok
vPC keep-alive status           : peer is alive
Configuration consistency status: success
Per-vlan consistency status     : success
Type-2 consistency status       : success
vPC role                        : primary
Number of vPCs configured       : 1
Peer Gateway                    : Disabled
Dual-active excluded VLANs      : -
Graceful Consistency Check      : Enabled

vPC Peer-link status
---------------------------------------------------------------------
id   Port   Status Active vlans
--   ----   ------ -------------------------------------------------
1    Po1    up     1,10,20,30,40

vPC status
----------------------------------------------------------------------------
id     Port        Status Consistency Reason                     Active vlans
------ ----------- ------ ----------- -------------------------- -----------
5      Po2         up     success     success                    10,20,30,40

str# show vpc consistency-parameters global

    Legend:
```

```
        Type 1 : vPC will be suspended in case of mismatch

Name                        Type  Local Value            Peer Value
-------------               ----  ---------------------- -----------------------
QoS                         2     ([], [3], [], [], [],  ([], [3], [], [], [],
                                  [])                    [])
Network QoS (MTU)           2     (1538, 2240, 0, 0, 0,  (1538, 2240, 0, 0, 0,
                                  0)                     0)
Network Qos (Pause)         2     (F, T, F, F, F, F)     (F, T, F, F, F, F)
Input Queuing (Bandwidth)   2     (50, 50, 0, 0, 0, 0)   (50, 50, 0, 0, 0, 0)
Input Queuing (Absolute     2     (F, F, F, F, F, F)     (F, F, F, F, F, F)
Priority)
Output Queuing (Bandwidth)  2     (50, 50, 0, 0, 0, 0)   (50, 50, 0, 0, 0, 0)
Output Queuing (Absolute    2     (F, F, F, F, F, F)     (F, F, F, F, F, F)
Priority)
STP Mode                    1     MST                    MST
STP Disabled                1     None                   None
STP MST Region Name         1     PureFlex               PureFlex
STP MST Region Revision     1     10                     10
STP MST Region Instance to  1
 VLAN Mapping
STP Loopguard               1     Disabled               Disabled
STP Bridge Assurance        1     Enabled                Enabled
STP Port Type, Edge         1     Normal, Disabled,      Normal, Disabled,
BPDUFilter, Edge BPDUGuard        Disabled               Disabled
STP MST Simulate PVST       1     Enabled                Enabled
Allowed VLANs               -     1,10,20,30,40          1,10,20,30,40
Local suspended VLANs       -     -                      -


str# show vpc consistency-parameters interface po1
Note: **** Global type-1 parameters will be displayed for peer-link *****
    Legend:
        Type 1 : vPC will be suspended in case of mismatch

Name                        Type  Local Value            Peer Value
-------------               ----  ---------------------- -----------------------
QoS                         2     ([], [3], [], [], [],  ([], [3], [], [], [],
                                  [])                    [])
Network QoS (MTU)           2     (1538, 2240, 0, 0, 0,  (1538, 2240, 0, 0, 0,
                                  0)                     0)
Network Qos (Pause)         2     (F, T, F, F, F, F)     (F, T, F, F, F, F)
Input Queuing (Bandwidth)   2     (50, 50, 0, 0, 0, 0)   (50, 50, 0, 0, 0, 0)
Input Queuing (Absolute     2     (F, F, F, F, F, F)     (F, F, F, F, F, F)
Priority)
Output Queuing (Bandwidth)  2     (50, 50, 0, 0, 0, 0)   (50, 50, 0, 0, 0, 0)
Output Queuing (Absolute    2     (F, F, F, F, F, F)     (F, F, F, F, F, F)
Priority)
STP Mode                    1     MST                    MST
STP Disabled                1     None                   None
STP MST Region Name         1     PureFlex               PureFlex
STP MST Region Revision     1     10                     10
STP MST Region Instance to  1
 VLAN Mapping
STP Loopguard               1     Disabled               Disabled
STP Bridge Assurance        1     Enabled                Enabled
STP Port Type, Edge         1     Normal, Disabled,      Normal, Disabled,
BPDUFilter, Edge BPDUGuard        Disabled               Disabled
STP MST Simulate PVST       1     Enabled                Enabled
Allowed VLANs               -     1,10,20,30,40          1,10,20,30,40
```

```
Local suspended VLANs       -     -                      -

str# show vpc consistency-parameters vlan

Name                        Type  Reason Code             Pass Vlans
-------------               ----  --------------------- -----------------------
STP Mode                    1     success                0-4095
STP Disabled                1     success                0-4095
STP MST Region Name         1     success                0-4095
STP MST Region Revision     1     success                0-4095
STP MST Region Instance to  1     success                0-4095
 VLAN Mapping
STP Loopguard               1     success                0-4095
STP Bridge Assurance        1     success                0-4095
STP Port Type, Edge         1     success                0-4095
BPDUFilter, Edge BPDUGuard
STP MST Simulate PVST       1     success                0-4095
Pass Vlans                  -                            0-4095

str# show vpc consistency-parameters vpc 5

    Legend:
        Type 1 : vPC will be suspended in case of mismatch

Name                        Type  Local Value            Peer Value
-------------               ----  --------------------- -----------------------
Shut Lan                    1     No                     No
STP Port Type               1     Default                Default
STP Port Guard              1     None                   None
STP MST Simulate PVST       1     Default                Default
lag-id                      1     [(7f9b,                [(7f9b,
                                  0-23-4-ee-be-36, 8005, 0-23-4-ee-be-36, 8005,
                                   0, 0), (8000,          0, 0), (8000,
                                  8-17-f4-76-78-0, 5, 0, 8-17-f4-76-78-0, 5, 0,
                                   0)]                    0)]
mode                        1     active                 active
Speed                       1     10 Gb/s                10 Gb/s
Duplex                      1     full                   full
Port Mode                   1     trunk                  trunk
Native Vlan                 1     10                     10
MTU                         1     1500                   1500
Admin port mode             1
Allowed VLANs               -     10,20,30,40            10,20,30,40
Local suspended VLANs       -     -                      -
str# show vpc
Legend:
                (*) - local vPC is down, forwarding via vPC peer-link

vPC domain id                     : 54
Peer status                       : peer adjacency formed ok
vPC keep-alive status             : peer is alive
Configuration consistency status: success
Per-vlan consistency status       : success
Type-2 consistency status         : success
vPC role                          : primary
Number of vPCs configured         : 1
Peer Gateway                      : Disabled
Dual-active excluded VLANs        : -
Graceful Consistency Check        : Enabled
```

```
vPC Peer-link status
---------------------------------------------------------------------
id   Port   Status Active vlans
--   ----   ------ -------------------------------------------------
1    Po1    up     1,10,20,30,40

vPC status
----------------------------------------------------------------------------
id     Port        Status Consistency Reason                     Active vlans
------ ----------- ------ ----------- -------------------------- -----------
5      Po2         up     success     success                    10,20,30,40

str# show vpc 5


vPC status
----------------------------------------------------------------------------
id     Port        Status Consistency Reason                     Active vlans
------ ----------- ------ ----------- -------------------------- -----------
5      Po2         up     success     success                    10,20,30,40

str#
```

4.5.9 Verifying the vPC configuration on VIE

The commands that are shown Example 4-36 were used to verify the vPC configuration of the VIE switch.

Example 4-36 Output of show commands on VIE

```
vie# show vpc peer-keepalive

vPC keep-alive status           : peer is alive
--Peer is alive for             : (3289) seconds, (742) msec
--Send status                   : Success
--Last send at                  : 2012.05.23 19:12:07 422 ms
--Sent on interface             : mgmt0
--Receive status                : Success
--Last receive at               : 2012.05.23 19:12:07 780 ms
--Received on interface         : mgmt0
--Last update from peer         : (0) seconds, (559) msec

vPC Keep-alive parameters
--Destination                   : 192.168.240.30
--Keepalive interval            : 1000 msec
--Keepalive timeout             : 5 seconds
--Keepalive hold timeout        : 3 seconds
--Keepalive vrf                 : management
--Keepalive udp port            : 3200
--Keepalive tos                 : 192

vie# show vpc brief
Legend:
                (*) - local vPC is down, forwarding via vPC peer-link

vPC domain id                   : 54
Peer status                     : peer adjacency formed ok
vPC keep-alive status           : peer is alive
Configuration consistency status: success
```

```
Per-vlan consistency status     : success
Type-2 consistency status       : success
vPC role                        : secondary
Number of vPCs configured       : 1
Peer Gateway                    : Disabled
Dual-active excluded VLANs      : -
Graceful Consistency Check      : Enabled

vPC Peer-link status
---------------------------------------------------------------------
id   Port   Status Active vlans
--   ----   ------ -------------------------------------------------
1    Po1    up     1,10,20,30,40

vPC status
----------------------------------------------------------------------------
id     Port        Status Consistency Reason                     Active vlans
------ ----------- ------ ----------- -------------------------- -----------
5      Po3         up     success     success                    10,20,30,40

vie# show vpc
Legend:
                (*) - local vPC is down, forwarding via vPC peer-link

vPC domain id                    : 54
Peer status                      : peer adjacency formed ok
vPC keep-alive status            : peer is alive
Configuration consistency status: success
Per-vlan consistency status      : success
Type-2 consistency status        : success
vPC role                         : secondary
Number of vPCs configured        : 1
Peer Gateway                     : Disabled
Dual-active excluded VLANs       : -
Graceful Consistency Check       : Enabled

vPC Peer-link status
---------------------------------------------------------------------
id   Port   Status Active vlans
--   ----   ------ -------------------------------------------------
1    Po1    up     1,10,20,30,40

vPC status
----------------------------------------------------------------------------
id     Port        Status Consistency Reason                     Active vlans
------ ----------- ------ ----------- -------------------------- -----------
5      Po3         up     success     success                    10,20,30,40

vie# show vpc consistency-parameters global

    Legend:
        Type 1 : vPC will be suspended in case of mismatch

Name                        Type  Local Value            Peer Value
-------------               ----  ---------------------- -----------------------
QoS                         2     ([], [3], [], [], [],  ([], [3], [], [], [],
                                  [])                    [])
Network QoS (MTU)           2     (1538, 2240, 0, 0, 0,  (1538, 2240, 0, 0, 0,
                                  0)                     0)
Network Qos (Pause)         2     (F, T, F, F, F, F)     (F, T, F, F, F, F)
```

```
Input Queuing (Bandwidth)   2     (50, 50, 0, 0, 0, 0)   (50, 50, 0, 0, 0, 0)
Input Queuing (Absolute     2     (F, F, F, F, F, F)     (F, F, F, F, F, F)
Priority)
Output Queuing (Bandwidth)  2     (50, 50, 0, 0, 0, 0)   (50, 50, 0, 0, 0, 0)
Output Queuing (Absolute    2     (F, F, F, F, F, F)     (F, F, F, F, F, F)
Priority)
STP Mode                    1     MST                    MST
STP Disabled                1     None                   None
STP MST Region Name         1     PureFlex               PureFlex
STP MST Region Revision     1     10                     10
STP MST Region Instance to  1
 VLAN Mapping
STP Loopguard               1     Disabled               Disabled
STP Bridge Assurance        1     Enabled                Enabled
STP Port Type, Edge         1     Normal, Disabled,      Normal, Disabled,
BPDUFilter, Edge BPDUGuard        Disabled               Disabled
STP MST Simulate PVST       1     Enabled                Enabled
Allowed VLANs               -     1,10,20,30,40          1,10,20,30,40
Local suspended VLANs       -     -                      -

vie# show vpc consistency-parameters interface port-channel 1
Note: **** Global type-1 parameters will be displayed for peer-link *****
    Legend:
        Type 1 : vPC will be suspended in case of mismatch

Name                        Type  Local Value            Peer Value
-------------               ----  ---------------------- -----------------------
QoS                         2     ([], [3], [], [], [],  ([], [3], [], [], [],
                                  [])                    [])
Network QoS (MTU)           2     (1538, 2240, 0, 0, 0,  (1538, 2240, 0, 0, 0,
                                  0)                     0)
Network Qos (Pause)         2     (F, T, F, F, F, F)     (F, T, F, F, F, F)
Input Queuing (Bandwidth)   2     (50, 50, 0, 0, 0, 0)   (50, 50, 0, 0, 0, 0)
Input Queuing (Absolute     2     (F, F, F, F, F, F)     (F, F, F, F, F, F)
Priority)
Output Queuing (Bandwidth)  2     (50, 50, 0, 0, 0, 0)   (50, 50, 0, 0, 0, 0)
Output Queuing (Absolute    2     (F, F, F, F, F, F)     (F, F, F, F, F, F)
Priority)
STP Mode                    1     MST                    MST
STP Disabled                1     None                   None
STP MST Region Name         1     PureFlex               PureFlex
STP MST Region Revision     1     10                     10
STP MST Region Instance to  1
 VLAN Mapping
STP Loopguard               1     Disabled               Disabled
STP Bridge Assurance        1     Enabled                Enabled
STP Port Type, Edge         1     Normal, Disabled,      Normal, Disabled,
BPDUFilter, Edge BPDUGuard        Disabled               Disabled
STP MST Simulate PVST       1     Enabled                Enabled
Allowed VLANs               -     1,10,20,30,40          1,10,20,30,40
Local suspended VLANs       -     -                      -

vie# show vpc consistency-parameters vlan

Name                        Type  Reason Code             Pass Vlans
-------------               ----  ---------------------- -----------------------
STP Mode                    1     success                0-4095
STP Disabled                1     success                0-4095
STP MST Region Name         1     success                0-4095
STP MST Region Revision     1     success                0-4095
```

```
STP MST Region Instance to  1     success                0-4095
 VLAN Mapping
STP Loopguard               1     success                0-4095
STP Bridge Assurance        1     success                0-4095
STP Port Type, Edge         1     success                0-4095
BPDUFilter, Edge BPDUGuard
STP MST Simulate PVST       1     success                0-4095
Pass Vlans                  -                            0-4095

vie# show vpc consistency-parameters vpc 5

    Legend:
        Type 1 : vPC will be suspended in case of mismatch

Name                        Type  Local Value            Peer Value
-------------               ----  ---------------------- -----------------------
Shut Lan                    1     No                     No
STP Port Type               1     Default                Default
STP Port Guard              1     None                   None
STP MST Simulate PVST       1     Default                Default
lag-id                      1     [(7f9b,                [(7f9b,
                                  0-23-4-ee-be-36, 8005, 0-23-4-ee-be-36, 8005,
                                   0, 0), (8000,          0, 0), (8000,
                                  8-17-f4-76-78-0, 5, 0, 8-17-f4-76-78-0, 5, 0,
                                   0)]                    0)]
mode                        1     active                 active
Speed                       1     10 Gb/s                10 Gb/s
Duplex                      1     full                   full
Port Mode                   1     trunk                  trunk
Native Vlan                 1     10                     10
MTU                         1     1500                   1500
Admin port mode             1
Allowed VLANs               -     10,20,30,40            10,20,30,40
Local suspended VLANs       -     -                      -
vie# show vpc 5


vPC status
----------------------------------------------------------------------------
id     Port        Status Consistency Reason                     Active vlans
------ ----------- ------ ----------- -------------------------- -----------
5      Po3         up     success     success                    10,20,30,40

vie#
```

The Flex System switch now includes one port channel that consists of four links to the Cisco switches, instead of two port channels that consist of two links each to two N5000 switches, as shown in Example 4-37 on page 154. The vPC 5 on Cisco does not need to be the same vPC 5 that was used in the Flex System configuration. These values are significant only to Cisco and the IBM Flex System switch.

Example 4-37 Output of show lacp command

```
Flex#sh lacp aggregator 5
Aggregator Id  5
----------------------------------------------
Aggregator MAC address  - 08:17:f4:76:78:89
Actor System Priority   - 32768
Actor System ID         - 08:17:f4:76:78:00
Individual              - FALSE
Actor Oper Key          - 5
Partner System Priority - 32667
Partner System ID       - 00:23:04:ee:be:36
Partner Oper Key        - 32773
ready                   - TRUE
Min-Links               - 1
Number of Ports in aggr - 4
index  0    port EXT24
index  1    port EXT21
index  2    port EXT22
index  3    port EXT23
```

MST spanning tree is still configured, as shown in Example 4-38. In contrast to the configurations that do not include vPC, all four ports are in spanning tree status forwarding because they all belong to the same LCAP channel.

Example 4-38 Output of show spanning-tree commands

```
Flex#sh spanning-tree
-----------------------------------------------------------------
Pvst+ compatibility mode enabled

Mstp Digest: 0xe821ccee7501115289b37c79a72e07c9

-----------------------------------------------------------------
Spanning Tree Group 1: On (MSTP)
VLANs MAPPED:  10 30
VLANs:  10 30

Current Root:            Path-Cost  Port
 6000 00:05:9b:7b:84:3c      490   EXT21

Parameters:  Priority  Aging   Topology Change Counts
              61440     300                 21

    Port      Prio    Cost    State  Role Designated Bridge      Des Port    Type
------------- ---- ---------- -----  ---- ---------------------- -------- ----------
EXT4           128     20000!  FWD   DESG f000-08:17:f4:76:78:00     8020        P2P
EXT21 (pc53)   128       490!+ FWD   ROOT 6000-00:23:04:ee:be:36     9001        P2P
EXT22 (pc53)   128       490!+ FWD   ROOT 6000-00:23:04:ee:be:36     9001        P2P
EXT23 (pc53)   128       490!+ FWD   ROOT 6000-00:23:04:ee:be:36     9001        P2P
EXT24 (pc53)   128       490!+ FWD   ROOT 6000-00:23:04:ee:be:36     9001        P2P
! = Automatic path cost.
+ = Portchannel cost, not the individual port cost.

-----------------------------------------------------------------
Spanning Tree Group 2: On (MSTP)
VLANs MAPPED:  20 40
VLANs:  20 40

Current Root:            Path-Cost  Port
```

```
 6000 00:0d:ec:a3:8f:bc     1490   EXT21

Parameters:  Priority  Aging   Topology Change Counts
              61440     300                 18

    Port      Prio    Cost    State  Role Designated Bridge      Des Port    Type
------------- ---- ---------- -----  ---- ---------------------- -------- ----------
EXT4           128     20000!  FWD   DESG f000-08:17:f4:76:78:00     8020        P2P
EXT21 (pc53)   128       490!+ FWD   ROOT 8000-00:23:04:ee:be:36     9001        P2P
EXT22 (pc53)   128       490!+ FWD   ROOT 8000-00:23:04:ee:be:36     9001        P2P
EXT23 (pc53)   128       490!+ FWD   ROOT 8000-00:23:04:ee:be:36     9001        P2P
EXT24 (pc53)   128 str# show spanning-tree
No spanning tree instance exists.

str# show vpc peer-keep

vPC keep-alive status           : peer is alive
--Peer is alive for             : (5012) seconds, (175) msec
--Send status                   : Success
--Last send at                  : 2012.05.23 19:40:51 754 ms
--Sent on interface             : mgmt0
--Receive status                : Success
--Last receive at               : 2012.05.23 19:40:51 941 ms
--Received on interface         : mgmt0
--Last update from peer         : (0) seconds, (428) msec

vPC Keep-alive parameters
--Destination                   : 192.168.240.20
--Keepalive interval            : 1000 msec
--Keepalive timeout             : 5 seconds
--Keepalive hold timeout        : 3 seconds
--Keepalive vrf                 : management
--Keepalive udp port            : 3200
--Keepalive tos                 : 192

str# show vpc brief
Legend:
                (*) - local vPC is down, forwarding via vPC peer-link

vPC domain id                   : 54
Peer status                     : peer adjacency formed ok
vPC keep-alive status           : peer is alive
Configuration consistency status: success
Per-vlan consistency status     : success
Type-2 consistency status       : success
vPC role                        : primary
Number of vPCs configured       : 1
Peer Gateway                    : Disabled
Dual-active excluded VLANs      : -
Graceful Consistency Check      : Enabled

vPC Peer-link status
---------------------------------------------------------------------
id   Port   Status Active vlans
--   ----   ------ -------------------------------------------------
1    Po1    up     1,10,20,30,40

vPC status
----------------------------------------------------------------------------
id     Port        Status Consistency Reason                     Active vlans
```

```
------ ----------- ------ ----------- ------------------------- -----------
5      Po2         up     success     success                   10,20,30,40

str# show vpc consistency-parameters global

    Legend:
        Type 1 : vPC will be suspended in case of mismatch

Name                        Type  Local Value            Peer Value
-------------               ----  ---------------------- -----------------------
QoS                         2     ([], [3], [], [], [],  ([], [3], [], [], [],
                                  [])                    [])
Network QoS (MTU)           2     (1538, 2240, 0, 0, 0,  (1538, 2240, 0, 0, 0,
                                  0)                     0)
Network Qos (Pause)         2     (F, T, F, F, F, F)     (F, T, F, F, F, F)
Input Queuing (Bandwidth)   2     (50, 50, 0, 0, 0, 0)   (50, 50, 0, 0, 0, 0)
Input Queuing (Absolute     2     (F, F, F, F, F, F)     (F, F, F, F, F, F)
Priority)
Output Queuing (Bandwidth)  2     (50, 50, 0, 0, 0, 0)   (50, 50, 0, 0, 0, 0)
Output Queuing (Absolute    2     (F, F, F, F, F, F)     (F, F, F, F, F, F)
Priority)
STP Mode                    1     Rapid-PVST             Rapid-PVST
STP Disabled                1     VLANs 1,10,20,30,40    VLANs 1,10,20,30,40
STP MST Region Name         1     PureFlex               PureFlex
STP MST Region Revision     1     10                     10
STP MST Region Instance to  1
 VLAN Mapping
STP Loopguard               1     Disabled               Disabled
STP Bridge Assurance        1     Enabled                Enabled
STP Port Type, Edge         1     Normal, Disabled,      Normal, Disabled,
BPDUFilter, Edge BPDUGuard        Disabled               Disabled
STP MST Simulate PVST       1     Enabled                Enabled
Allowed VLANs               -     1,10,20,30,40          1,10,20,30,40
Local suspended VLANs       -     -                      -

str# show vpc consistency-parameters interface po1
Note: **** Global type-1 parameters will be displayed for peer-link *****
    Legend:
        Type 1 : vPC will be suspended in case of mismatch

Name                        Type  Local Value            Peer Value
-------------               ----  ---------------------- -----------------------
QoS                         2     ([], [3], [], [], [],  ([], [3], [], [], [],
                                  [])                    [])
Network QoS (MTU)           2     (1538, 2240, 0, 0, 0,  (1538, 2240, 0, 0, 0,
                                  0)                     0)
Network Qos (Pause)         2     (F, T, F, F, F, F)     (F, T, F, F, F, F)
Input Queuing (Bandwidth)   2     (50, 50, 0, 0, 0, 0)   (50, 50, 0, 0, 0, 0)
Input Queuing (Absolute     2     (F, F, F, F, F, F)     (F, F, F, F, F, F)
Priority)
Output Queuing (Bandwidth)  2     (50, 50, 0, 0, 0, 0)   (50, 50, 0, 0, 0, 0)
Output Queuing (Absolute    2     (F, F, F, F, F, F)     (F, F, F, F, F, F)
Priority)
STP Mode                    1     Rapid-PVST             Rapid-PVST
STP Disabled                1     VLANs 1,10,20,30,40    VLANs 1,10,20,30,40
STP MST Region Name         1     PureFlex               PureFlex
STP MST Region Revision     1     10                     10
STP MST Region Instance to  1
 VLAN Mapping
STP Loopguard               1     Disabled               Disabled
```

```
STP Bridge Assurance        1     Enabled                Enabled
STP Port Type, Edge         1     Normal, Disabled,      Normal, Disabled,
BPDUFilter, Edge BPDUGuard        Disabled               Disabled
STP MST Simulate PVST       1     Enabled                Enabled
Allowed VLANs               -     1,10,20,30,40          1,10,20,30,40
Local suspended VLANs       -     -                      -

str# show vpc consistency-parameters vlan

Name                        Type  Reason Code             Pass Vlans
-------------               ----  ---------------------- -----------------------
STP Mode                    1     success                0-4095
STP Disabled                1     success                0-4095
STP MST Region Name         1     success                0-4095
STP MST Region Revision     1     success                0-4095
STP MST Region Instance to  1     success                0-4095
 VLAN Mapping
STP Loopguard               1     success                0-4095
STP Bridge Assurance        1     success                0-4095
STP Port Type, Edge         1     success                0-4095
BPDUFilter, Edge BPDUGuard
STP MST Simulate PVST       1     success                0-4095
Pass Vlans                  -                            0-4095

str# show vpc consistency-parameters vpc 5

    Legend:
        Type 1 : vPC will be suspended in case of mismatch

Name                        Type  Local Value            Peer Value
-------------               ----  ---------------------- -----------------------
Shut Lan                    1     No                     No
STP Port Type               1     Default                Default
STP Port Guard              1     None                   None
STP MST Simulate PVST       1     Default                Default
lag-id                      1     [(7f9b,                [(7f9b,
                                  0-23-4-ee-be-36, 8005, 0-23-4-ee-be-36, 8005,
                                   0, 0), (8000,          0, 0), (8000,
                                  8-17-f4-76-78-0, 5, 0, 8-17-f4-76-78-0, 5, 0,
                                   0)]                    0)]
mode                        1     active                 active
Speed                       1     10 Gb/s                10 Gb/s
Duplex                      1     full                   full
Port Mode                   1     trunk                  trunk
Native Vlan                 1     10                     10
MTU                         1     1500                   1500
Admin port mode             1
Allowed VLANs               -     10,20,30,40            10,20,30,40
Local suspended VLANs       -     -                      -
str# show vpc
Legend:
                (*) - local vPC is down, forwarding via vPC peer-link

vPC domain id                     : 54
Peer status                       : peer adjacency formed ok
vPC keep-alive status             : peer is alive
Configuration consistency status: success
Per-vlan consistency status       : success
Type-2 consistency status         : success
vPC role                          : primary
```

```
Number of vPCs configured       : 1
Peer Gateway                    : Disabled
Dual-active excluded VLANs      : -
Graceful Consistency Check      : Enabled

vPC Peer-link status
---------------------------------------------------------------------
id   Port   Status Active vlans
--   ----   ------ -------------------------------------------------
1    Po1    up     1,10,20,30,40

vPC status
----------------------------------------------------------------------------
id     Port        Status Consistency Reason                     Active vlans
------ ----------- ------ ----------- -------------------------- -----------
5      Po2         up     success     success                    10,20,30,40

str# show spanning-tree
No spanning tree instance exists.

str# show vpc peer-keep

vPC keep-alive status           : peer is alive
--Peer is alive for             : (5012) seconds, (175) msec
--Send status                   : Success
--Last send at                  : 2012.05.23 19:40:51 754 ms
--Sent on interface             : mgmt0
--Receive status                : Success
--Last receive at               : 2012.05.23 19:40:51 941 ms
--Received on interface         : mgmt0
--Last update from peer         : (0) seconds, (428) msec

vPC Keep-alive parameters
--Destination                   : 192.168.240.20
--Keepalive interval            : 1000 msec
--Keepalive timeout             : 5 seconds
--Keepalive hold timeout        : 3 seconds
--Keepalive vrf                 : management
--Keepalive udp port            : 3200
--Keepalive tos                 : 192
str# show vpc brief
Legend:
                (*) - local vPC is down, forwarding via vPC peer-link

vPC domain id                   : 54
Peer status                     : peer adjacency formed ok
vPC keep-alive status           : peer is alive
Configuration consistency status: success
Per-vlan consistency status     : success
Type-2 consistency status       : success
vPC role                        : primary
Number of vPCs configured       : 1
Peer Gateway                    : Disabled
Dual-active excluded VLANs      : -
Graceful Consistency Check      : Enabled

vPC Peer-link status
---------------------------------------------------------------------
id   Port   Status Active vlans
--   ----   ------ -------------------------------------------------
```

```
1    Po1    up     1,10,20,30,40

vPC status
----------------------------------------------------------------------------
id     Port        Status Consistency Reason                     Active vlans
------ ----------- ------ ----------- -------------------------- -----------
5      Po2         up     success     success                    10,20,30,40

str# show vpc consistency-parameters global

    Legend:
        Type 1 : vPC will be suspended in case of mismatch

Name                        Type  Local Value            Peer Value
-------------               ----  ---------------------- -----------------------
QoS                         2     ([], [3], [], [], [],  ([], [3], [], [], [],
                                  [])                    [])
Network QoS (MTU)           2     (1538, 2240, 0, 0, 0,  (1538, 2240, 0, 0, 0,
                                  0)                     0)
Network Qos (Pause)         2     (F, T, F, F, F, F)     (F, T, F, F, F, F)
Input Queuing (Bandwidth)   2     (50, 50, 0, 0, 0, 0)   (50, 50, 0, 0, 0, 0)
Input Queuing (Absolute     2     (F, F, F, F, F, F)     (F, F, F, F, F, F)
Priority)
Output Queuing (Bandwidth)  2     (50, 50, 0, 0, 0, 0)   (50, 50, 0, 0, 0, 0)
Output Queuing (Absolute    2     (F, F, F, F, F, F)     (F, F, F, F, F, F)
Priority)
STP Mode                    1     Rapid-PVST             Rapid-PVST
STP Disabled                1     VLANs 1,10,20,30,40    VLANs 1,10,20,30,40
STP MST Region Name         1     PureFlex               PureFlex
STP MST Region Revision     1     10                     10
STP MST Region Instance to  1
 VLAN Mapping
STP Loopguard               1     Disabled               Disabled
STP Bridge Assurance        1     Enabled                Enabled
STP Port Type, Edge         1     Normal, Disabled,      Normal, Disabled,
BPDUFilter, Edge BPDUGuard        Disabled               Disabled
STP MST Simulate PVST       1     Enabled                Enabled
Allowed VLANs               -     1,10,20,30,40          1,10,20,30,40
Local suspended VLANs       -     -                      -
str# show vpc consistency-parameters interface po1
Note: **** Global type-1 parameters will be displayed for peer-link *****
    Legend:
        Type 1 : vPC will be suspended in case of mismatch

Name                        Type  Local Value            Peer Value
-------------               ----  ---------------------- -----------------------
QoS                         2     ([], [3], [], [], [],  ([], [3], [], [], [],
                                  [])                    [])
Network QoS (MTU)           2     (1538, 2240, 0, 0, 0,  (1538, 2240, 0, 0, 0,
                                  0)                     0)
Network Qos (Pause)         2     (F, T, F, F, F, F)     (F, T, F, F, F, F)
Input Queuing (Bandwidth)   2     (50, 50, 0, 0, 0, 0)   (50, 50, 0, 0, 0, 0)
Input Queuing (Absolute     2     (F, F, F, F, F, F)     (F, F, F, F, F, F)
Priority)
Output Queuing (Bandwidth)  2     (50, 50, 0, 0, 0, 0)   (50, 50, 0, 0, 0, 0)
Output Queuing (Absolute    2     (F, F, F, F, F, F)     (F, F, F, F, F, F)
Priority)
STP Mode                    1     Rapid-PVST             Rapid-PVST
STP Disabled                1     VLANs 1,10,20,30,40    VLANs 1,10,20,30,40
STP MST Region Name         1     PureFlex               PureFlex
```

```
STP MST Region Revision     1     10                     10
STP MST Region Instance to  1
 VLAN Mapping
STP Loopguard               1     Disabled               Disabled
STP Bridge Assurance        1     Enabled                Enabled
STP Port Type, Edge         1     Normal, Disabled,      Normal, Disabled,
BPDUFilter, Edge BPDUGuard        Disabled               Disabled
STP MST Simulate PVST       1     Enabled                Enabled
Allowed VLANs               -     1,10,20,30,40          1,10,20,30,40
Local suspended VLANs       -     -                      -
str# show vpc consistency-parameters vlan

Name                        Type  Reason Code             Pass Vlans
-------------               ----  ---------------------- -----------------------
STP Mode                    1     success                0-4095
STP Disabled                1     success                0-4095
STP MST Region Name         1     success                0-4095
STP MST Region Revision     1     success                0-4095
STP MST Region Instance to  1     success                0-4095
 VLAN Mapping
STP Loopguard               1     success                0-4095
STP Bridge Assurance        1     success                0-4095
STP Port Type, Edge         1     success                0-4095
BPDUFilter, Edge BPDUGuard
STP MST Simulate PVST       1     success                0-4095
Pass Vlans                  -                            0-4095

str# show vpc consistency-parameters vpc 5

    Legend:
        Type 1 : vPC will be suspended in case of mismatch

Name                        Type  Local Value            Peer Value
-------------               ----  ---------------------- -----------------------
Shut Lan                    1     No                     No
STP Port Type               1     Default                Default
STP Port Guard              1     None                   None
STP MST Simulate PVST       1     Default                Default
lag-id                      1     [(7f9b,                [(7f9b,
                                  0-23-4-ee-be-36, 8005, 0-23-4-ee-be-36, 8005,
                                   0, 0), (8000,          0, 0), (8000,
                                  8-17-f4-76-78-0, 5, 0, 8-17-f4-76-78-0, 5, 0,
                                   0)]                    0)]
mode                        1     active                 active
Speed                       1     10 Gb/s                10 Gb/s
Duplex                      1     full                   full
Port Mode                   1     trunk                  trunk
Native Vlan                 1     10                     10
MTU                         1     1500                   1500
Admin port mode             1
Allowed VLANs               -     10,20,30,40            10,20,30,40
Local suspended VLANs       -     -                      -
str# show vpc
Legend:
                (*) - local vPC is down, forwarding via vPC peer-link

vPC domain id                     : 54
Peer status                       : peer adjacency formed ok
vPC keep-alive status             : peer is alive
Configuration consistency status: success
```

```
Per-vlan consistency status     : success
Type-2 consistency status       : success
vPC role                        : primary
Number of vPCs configured       : 1
Peer Gateway                    : Disabled
Dual-active excluded VLANs      : -
Graceful Consistency Check      : Enabled

vPC Peer-link status
---------------------------------------------------------------------
id   Port   Status Active vlans
--   ----   ------ -------------------------------------------------
1    Po1    up     1,10,20,30,40

vPC status
----------------------------------------------------------------------------
id     Port        Status Consistency Reason                     Active vlans
------ ----------- ------ ----------- -------------------------- -----------
5      Po2         up     success     success                    10,20,30,40

str#      490!+ FWD   ROOT 8000-00:23:04:ee:be:36     9001        P2P
! = Automatic path cost.
+ = Portchannel cost, not the individual port cost.
```

4.6 Use Case 5: LACP Channeling and vPC without spanning tree

We can switch off spanning tree because we now have two switches that are connected with one cable. The physical setup still consists of two Nexus 5000 switches and four 10 GE links, as shown in Figure 4-12.

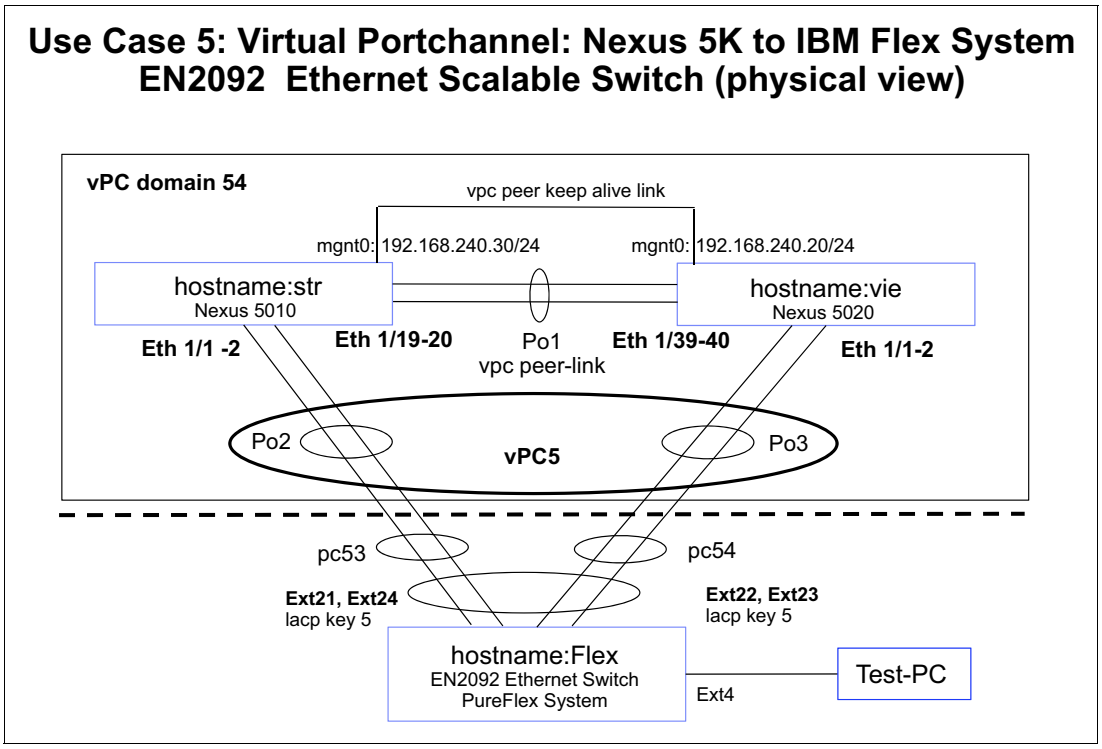

Figure 4-12 Use Case 5

We disabled STP for VLANs 10, 20, 30, and 40.

After STP is switched off and LACP and vPC are used, the logical setup looks like two switches that are connected by one cable. Because of this configuration, there is no need for an STP to run to block redundant links, as shown in Figure 4-13 on page 163.

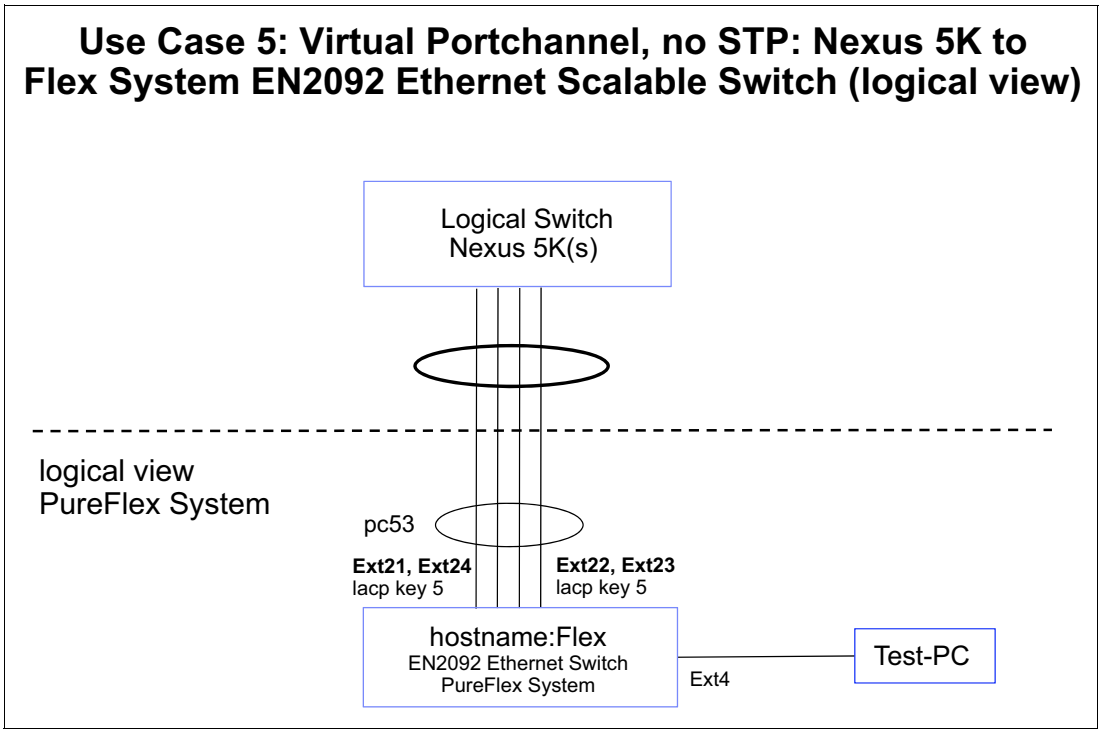

Figure 4-13 Use Case 5: Logical view

4.6.1 Configuring vPC on STR

The commands that are shown Example 4-39 were used to configure vPC on STR. The important parameters and details are highlighted in red.

Example 4-39 Use Case 5

```
str# show spanning-tree
No spanning tree instance exists.

str# show vpc peer-keepalive

vPC keep-alive status           : peer is alive
--Peer is alive for             : (5012) seconds, (175) msec
--Send status                   : Success
--Last send at                  : 2012.05.23 19:40:51 754 ms
--Sent on interface             : mgmt0
--Receive status                : Success
--Last receive at               : 2012.05.23 19:40:51 941 ms
--Received on interface         : mgmt0
--Last update from peer         : (0) seconds, (428) msec

vPC Keep-alive parameters
--Destination                   : 192.168.240.20
--Keepalive interval            : 1000 msec
--Keepalive timeout             : 5 seconds
--Keepalive hold timeout        : 3 seconds
--Keepalive vrf                 : management
--Keepalive udp port            : 3200
--Keepalive tos                 : 192
str# show vpc brief
Legend:
```

```
                (*) - local vPC is down, forwarding via vPC peer-link

vPC domain id                    : 54
Peer status                      : peer adjacency formed ok
vPC keep-alive status            : peer is alive
Configuration consistency status: success
Per-vlan consistency status      : success
Type-2 consistency status        : success
vPC role                         : primary
Number of vPCs configured        : 1
Peer Gateway                     : Disabled
Dual-active excluded VLANs       : -
Graceful Consistency Check       : Enabled

vPC Peer-link status
---------------------------------------------------------------------
id   Port   Status Active vlans
--   ----   ------ -------------------------------------------------
1    Po1    up     1,10,20,30,40

vPC status
----------------------------------------------------------------------------
id     Port        Status Consistency Reason                     Active vlans
------ ----------- ------ ----------- -------------------------- -----------
5      Po2         up     success     success                    10,20,30,40

str# show vpc consistency-parameters global

    Legend:
        Type 1 : vPC will be suspended in case of mismatch

Name                        Type  Local Value            Peer Value
-------------               ----  ---------------------- -----------------------
QoS                         2     ([], [3], [], [], [],  ([], [3], [], [], [],
                                  [])                    [])
Network QoS (MTU)           2     (1538, 2240, 0, 0, 0,  (1538, 2240, 0, 0, 0,
                                  0)                     0)
Network Qos (Pause)         2     (F, T, F, F, F, F)     (F, T, F, F, F, F)
Input Queuing (Bandwidth)   2     (50, 50, 0, 0, 0, 0)   (50, 50, 0, 0, 0, 0)
Input Queuing (Absolute     2     (F, F, F, F, F, F)     (F, F, F, F, F, F)
Priority)
Output Queuing (Bandwidth)  2     (50, 50, 0, 0, 0, 0)   (50, 50, 0, 0, 0, 0)
Output Queuing (Absolute    2     (F, F, F, F, F, F)     (F, F, F, F, F, F)
Priority)
STP Mode                    1     Rapid-PVST             Rapid-PVST
STP Disabled                1     VLANs 1,10,20,30,40    VLANs 1,10,20,30,40
STP MST Region Name         1     PureFlex               PureFlex
STP MST Region Revision     1     10                     10
STP MST Region Instance to  1
 VLAN Mapping
STP Loopguard               1     Disabled               Disabled
STP Bridge Assurance        1     Enabled                Enabled
STP Port Type, Edge         1     Normal, Disabled,      Normal, Disabled,
BPDUFilter, Edge BPDUGuard        Disabled               Disabled
STP MST Simulate PVST       1     Enabled                Enabled
Allowed VLANs               -     1,10,20,30,40          1,10,20,30,40
Local suspended VLANs       -     -                      -
str# show vpc consistency-parameters int po1
Note: **** Global type-1 parameters will be displayed for peer-link *****
    Legend:
```

```
        Type 1 : vPC will be suspended in case of mismatch

Name                        Type  Local Value            Peer Value
-------------               ----  ---------------------- -----------------------
QoS                         2     ([], [3], [], [], [],  ([], [3], [], [], [],
                                  [])                    [])
Network QoS (MTU)           2     (1538, 2240, 0, 0, 0,  (1538, 2240, 0, 0, 0,
                                  0)                     0)
Network Qos (Pause)         2     (F, T, F, F, F, F)     (F, T, F, F, F, F)
Input Queuing (Bandwidth)   2     (50, 50, 0, 0, 0, 0)   (50, 50, 0, 0, 0, 0)
Input Queuing (Absolute     2     (F, F, F, F, F, F)     (F, F, F, F, F, F)
Priority)
Output Queuing (Bandwidth)  2     (50, 50, 0, 0, 0, 0)   (50, 50, 0, 0, 0, 0)
Output Queuing (Absolute    2     (F, F, F, F, F, F)     (F, F, F, F, F, F)
Priority)
STP Mode                    1     Rapid-PVST             Rapid-PVST
STP Disabled                1     VLANs 1,10,20,30,40    VLANs 1,10,20,30,40
STP MST Region Name         1     PureFlex               PureFlex
STP MST Region Revision     1     10                     10
STP MST Region Instance to  1
 VLAN Mapping
STP Loopguard               1     Disabled               Disabled
STP Bridge Assurance        1     Enabled                Enabled
STP Port Type, Edge         1     Normal, Disabled,      Normal, Disabled,
BPDUFilter, Edge BPDUGuard        Disabled               Disabled
STP MST Simulate PVST       1     Enabled                Enabled
Allowed VLANs               -     1,10,20,30,40          1,10,20,30,40
Local suspended VLANs       -     -                      -
str# show vpc consistency-parameters vlan

Name                        Type  Reason Code             Pass Vlans
-------------               ----  ---------------------- -----------------------
STP Mode                    1     success                0-4095
STP Disabled                1     success                0-4095
STP MST Region Name         1     success                0-4095
STP MST Region Revision     1     success                0-4095
STP MST Region Instance to  1     success                0-4095
 VLAN Mapping
STP Loopguard               1     success                0-4095
STP Bridge Assurance        1     success                0-4095
STP Port Type, Edge         1     success                0-4095
BPDUFilter, Edge BPDUGuard
STP MST Simulate PVST       1     success                0-4095
Pass Vlans                  -                            0-4095
str# show vpc consistency-parameters vpc 5

    Legend:
        Type 1 : vPC will be suspended in case of mismatch

Name                        Type  Local Value            Peer Value
-------------               ----  ---------------------- -----------------------
Shut Lan                    1     No                     No
STP Port Type               1     Default                Default
STP Port Guard              1     None                   None
STP MST Simulate PVST       1     Default                Default
lag-id                      1     [(7f9b,                [(7f9b,
                                  0-23-4-ee-be-36, 8005, 0-23-4-ee-be-36, 8005,
                                   0, 0), (8000,          0, 0), (8000,
                                  8-17-f4-76-78-0, 5, 0, 8-17-f4-76-78-0, 5, 0,
                                   0)]                    0)]
```

```
mode                        1     active                active
Speed                       1     10 Gb/s               10 Gb/s
Duplex                      1     full                  full
Port Mode                   1     trunk                 trunk
Native Vlan                 1     10                    10
MTU                         1     1500                  1500
Admin port mode             1
Allowed VLANs               -     10,20,30,40           10,20,30,40
Local suspended VLANs       -     -                     -
str# show vpc
Legend:
                (*) - local vPC is down, forwarding via vPC peer-link

vPC domain id                   : 54
Peer status                     : peer adjacency formed ok
vPC keep-alive status           : peer is alive
Configuration consistency status: success
Per-vlan consistency status     : success
Type-2 consistency status       : success
vPC role                        : primary
Number of vPCs configured       : 1
Peer Gateway                    : Disabled
Dual-active excluded VLANs      : -
Graceful Consistency Check      : Enabled

vPC Peer-link status
---------------------------------------------------------------------
id   Port   Status Active vlans
--   ----   ------ -------------------------------------------------
1    Po1    up     1,10,20,30,40

vPC status
----------------------------------------------------------------------------
id     Port        Status Consistency Reason                     Active vlans
------ ----------- ------ ----------- -------------------------- -----------
5      Po2         up     success     success                    10,20,30,40

str#
```

4.6.2 Configuring vPC on VIE

The commands that are shown Example 4-40 were used to configure vPC on the VIE switch.

Example 4-40 Use Case 5: vPC config VIE

```
vie# show vpc peer-keepalive

vPC keep-alive status           : peer is alive
--Peer is alive for             : (5140) seconds, (176) msec
--Send status                   : Success
--Last send at                  : 2012.05.23 19:42:58 751 ms
--Sent on interface             : mgmt0
--Receive status                : Success
--Last receive at               : 2012.05.23 19:42:58 563 ms
--Received on interface         : mgmt0
--Last update from peer         : (0) seconds, (210) msec

vPC Keep-alive parameters
--Destination                   : 192.168.240.30
```

```
--Keepalive interval            : 1000 msec
--Keepalive timeout             : 5 seconds
--Keepalive hold timeout        : 3 seconds
--Keepalive vrf                 : management
--Keepalive udp port            : 3200
--Keepalive tos                 : 192
vie# show vpc brief
Legend:
                (*) - local vPC is down, forwarding via vPC peer-link

vPC domain id                   : 54
Peer status                     : peer adjacency formed ok
vPC keep-alive status           : peer is alive
Configuration consistency status: success
Per-vlan consistency status     : success
Type-2 consistency status       : success
vPC role                        : secondary
Number of vPCs configured       : 1
Peer Gateway                    : Disabled
Dual-active excluded VLANs      : -
Graceful Consistency Check      : Enabled

vPC Peer-link status
---------------------------------------------------------------------
id   Port   Status Active vlans
--   ----   ------ -------------------------------------------------
1    Po1    up     1,10,20,30,40

vPC status
----------------------------------------------------------------------------
id     Port        Status Consistency Reason                     Active vlans
------ ----------- ------ ----------- -------------------------- -----------
5      Po3         up     success     success                    10,20,30,40

vie# show vpc consistency-parameters global

    Legend:
        Type 1 : vPC will be suspended in case of mismatch

Name                        Type  Local Value            Peer Value
-------------               ----  ---------------------- -----------------------
QoS                         2     ([], [3], [], [], [],  ([], [3], [], [], [],
                                  [])                    [])
Network QoS (MTU)           2     (1538, 2240, 0, 0, 0,  (1538, 2240, 0, 0, 0,
                                  0)                     0)
Network Qos (Pause)         2     (F, T, F, F, F, F)     (F, T, F, F, F, F)
Input Queuing (Bandwidth)   2     (50, 50, 0, 0, 0, 0)   (50, 50, 0, 0, 0, 0)
Input Queuing (Absolute     2     (F, F, F, F, F, F)     (F, F, F, F, F, F)
Priority)
Output Queuing (Bandwidth)  2     (50, 50, 0, 0, 0, 0)   (50, 50, 0, 0, 0, 0)
Output Queuing (Absolute    2     (F, F, F, F, F, F)     (F, F, F, F, F, F)
Priority)
STP Mode                    1     Rapid-PVST             Rapid-PVST
STP Disabled                1     VLANs 1,10,20,30,40    VLANs 1,10,20,30,40
STP MST Region Name         1     PureFlex               PureFlex
STP MST Region Revision     1     10                     10
STP MST Region Instance to  1
 VLAN Mapping
STP Loopguard               1     Disabled               Disabled
STP Bridge Assurance        1     Enabled                Enabled
```

```
STP Port Type, Edge         1     Normal, Disabled,      Normal, Disabled,
BPDUFilter, Edge BPDUGuard        Disabled               Disabled
STP MST Simulate PVST       1     Enabled                Enabled
Allowed VLANs               -     1,10,20,30,40          1,10,20,30,40
Local suspended VLANs       -     -                      -
vie# show vpc consistency-parameters int po 1
Note: **** Global type-1 parameters will be displayed for peer-link *****
    Legend:
        Type 1 : vPC will be suspended in case of mismatch

Name                        Type  Local Value            Peer Value
-------------               ----  ---------------------- -----------------------
QoS                         2     ([], [3], [], [], [],  ([], [3], [], [], [],
                                  [])                    [])
Network QoS (MTU)           2     (1538, 2240, 0, 0, 0,  (1538, 2240, 0, 0, 0,
                                  0)                     0)
Network Qos (Pause)         2     (F, T, F, F, F, F)     (F, T, F, F, F, F)
Input Queuing (Bandwidth)   2     (50, 50, 0, 0, 0, 0)   (50, 50, 0, 0, 0, 0)
Input Queuing (Absolute     2     (F, F, F, F, F, F)     (F, F, F, F, F, F)
Priority)
Output Queuing (Bandwidth)  2     (50, 50, 0, 0, 0, 0)   (50, 50, 0, 0, 0, 0)
Output Queuing (Absolute    2     (F, F, F, F, F, F)     (F, F, F, F, F, F)
Priority)
STP Mode                    1     Rapid-PVST             Rapid-PVST
STP Disabled                1     VLANs 1,10,20,30,40    VLANs 1,10,20,30,40
STP MST Region Name         1     PureFlex               PureFlex
STP MST Region Revision     1     10                     10
STP MST Region Instance to  1
 VLAN Mapping
STP Loopguard               1     Disabled               Disabled
STP Bridge Assurance        1     Enabled                Enabled
STP Port Type, Edge         1     Normal, Disabled,      Normal, Disabled,
BPDUFilter, Edge BPDUGuard        Disabled               Disabled
STP MST Simulate PVST       1     Enabled                Enabled
Allowed VLANs               -     1,10,20,30,40          1,10,20,30,40
Local suspended VLANs       -     -                      -
vie# show vpc consistency-parameters vlan

Name                        Type  Reason Code             Pass Vlans
-------------               ----  ---------------------- -----------------------
STP Mode                    1     success                0-4095
STP Disabled                1     success                0-4095
STP MST Region Name         1     success                0-4095
STP MST Region Revision     1     success                0-4095
STP MST Region Instance to  1     success                0-4095
 VLAN Mapping
STP Loopguard               1     success                0-4095
STP Bridge Assurance        1     success                0-4095
STP Port Type, Edge         1     success                0-4095
BPDUFilter, Edge BPDUGuard
STP MST Simulate PVST       1     success                0-4095
Pass Vlans                  -                            0-4095
vie# show vpc consistency-parameters vpc 5

    Legend:
        Type 1 : vPC will be suspended in case of mismatch

Name                        Type  Local Value            Peer Value
-------------               ----  ---------------------- -----------------------
Shut Lan                    1     No                     No
```

```
STP Port Type               1     Default                Default
STP Port Guard              1     None                   None
STP MST Simulate PVST       1     Default                Default
lag-id                      1     [(7f9b,                [(7f9b,
                                  0-23-4-ee-be-36, 8005, 0-23-4-ee-be-36, 8005,
                                   0, 0), (8000,          0, 0), (8000,
                                  8-17-f4-76-78-0, 5, 0, 8-17-f4-76-78-0, 5, 0,
                                   0)]                    0)]
mode                        1     active                 active
Speed                       1     10 Gb/s                10 Gb/s
Duplex                      1     full                   full
Port Mode                   1     trunk                  trunk
Native Vlan                 1     10                     10
MTU                         1     1500                   1500
Admin port mode             1
Allowed VLANs               -     10,20,30,40            10,20,30,40
Local suspended VLANs       -     -                      -
```

4.6.3 Disabling STP on the Flex System switch

The commands that are shown Example 4-41 were used to disable STP on the Flex System switch. The important parameters and details are highlighted in red.

Example 4-41 Use Case 5: Flex System switch

```
!
spanning-tree mstp version 10
spanning-tree mstp name "PureFlex"
spanning-tree mode disable
!
spanning-tree stp 1 vlan 1
spanning-tree stp 1 vlan 10
spanning-tree stp 1 vlan 20
spanning-tree stp 1 vlan 30
spanning-tree stp 1 vlan 40

!

Show spanning tree on Flex


-----------------------------------------------------------------
Spanning Tree is shut down.

-----------------------------------------------------------------
-----------------------------------------------------------------
MSTP is not on.
```

5

Cisco Catalyst 6500 switch connectivity

Many customers still use the Cisco Catalyst 6500 switch in their data center. This chapter describes the use case that we performed with the IBM Flex System chassis and the Catalyst 6500 switch.

5.1 Use Case 1: LACP channeling and vPC without spanning tree

We had only one Catalyst 6500 switch available for this use case. We connected the one Flex System switch to one Catalyst 6500 switch by using four parallel links, as shown in Figure 5-1.

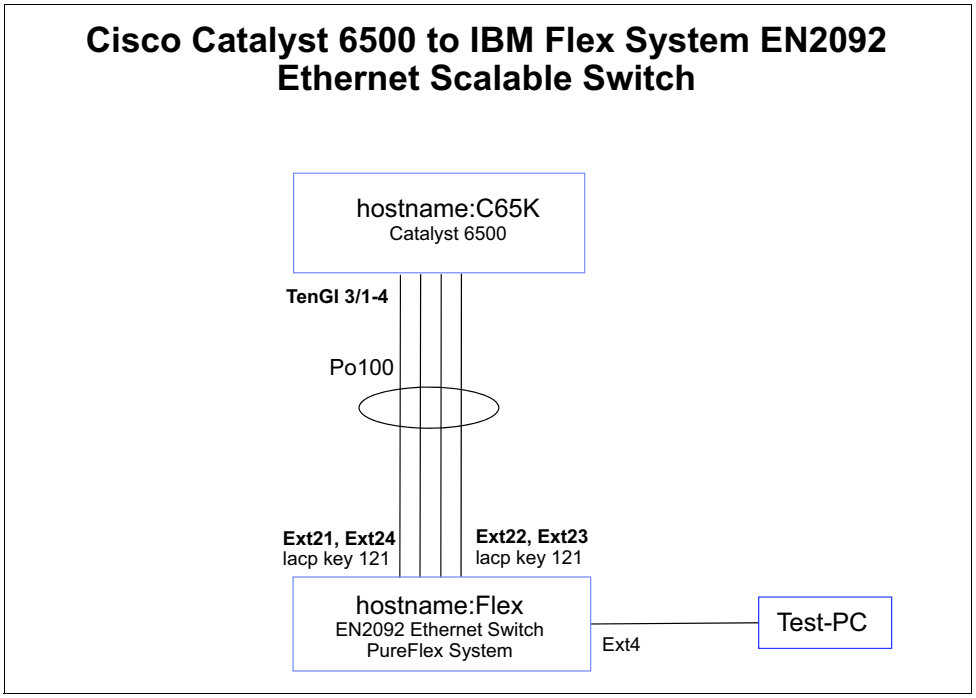

Figure 5-1 Catalyst 6500 Use Case

5.1.1 Catalyst 6500 switch configuration

The Catalyst 6500 switch configuration that was used in this use case is shown in Example 5-1. The important parameters and details are highlighted in red.

Example 5-1 Catalyst 6500 switch configuration

```
lldp run

interface Port-channel100
 switchport
 switchport trunk encapsulation dot1q
 switchport trunk native vlan 10
 switchport trunk allowed vlan 10,20,30,40
 switchport mode trunk
!
...

interface TenGigabitEthernet3/1
 description TO_Flex_EXT21
 switchport
 switchport trunk encapsulation dot1q
 switchport trunk native vlan 10
 switchport trunk allowed vlan 10,20,30,40
 switchport mode trunk
 channel-group 100 mode active
```

```
!
interface TenGigabitEthernet3/2
 description TO_Flex_EXT22
 switchport
 switchport trunk encapsulation dot1q
 switchport trunk native vlan 10
 switchport trunk allowed vlan 10,20,30,40
 switchport mode trunk
 channel-group 100 mode active
!
interface TenGigabitEthernet3/3
 description TO_Flex_EXT23
 switchport
 switchport trunk encapsulation dot1q
 switchport trunk native vlan 10
 switchport trunk allowed vlan 10,20,30,40
 switchport mode trunk
 channel-group 100 mode active
!
interface TenGigabitEthernet3/4
 description TO_Flex_EXT24
 switchport
 switchport trunk encapsulation dot1q
 switchport trunk native vlan 10
 switchport trunk allowed vlan 10,20,30,40
 switchport mode trunk
 channel-group 100 mode active

C6K#sh lldp neighbors

Capability codes:
    (R) Router, (B) Bridge, (T) Telephone, (C) DOCSIS Cable Device
    (W) WLAN Access Point, (P) Repeater, (S) Station, (O) Other

Device ID           Local Intf     Hold-time  Capability      Port ID
Flex                Te3/1          120        B,R             49
Flex                Te3/4          120        B,R             52
Flex                Te3/3          120        B,R             51
Flex                Te3/2          120        B,R             50

Total entries displayed: 4Te3/2          120        B,R             50
```

5.1.2 Flex System switch configuration

The Flex System switch configuration that was used in this use case is shown in Example 5-2. The important parameters and details are highlighted in red.

Example 5-2 Flex System switch configuration

```
!
spanning-tree mstp version 10
spanning-tree mstp name "PureFlex"
spanning-tree mode disable
!
spanning-tree stp 1 vlan 1
spanning-tree stp 1 vlan 10
spanning-tree stp 1 vlan 20
spanning-tree stp 1 vlan 30
spanning-tree stp 1 vlan 40


!
interface port EXT21
        name "TO_C6K_TEN3/1"
        tagging
        pvid 10
        exit
!
interface port EXT22
        name "TO_C6K_TEN3/2"
        tagging
        pvid 10
        exit
!
interface port EXT23
        name "TO_C6K_TEN3/3"
        tagging
        pvid 10
        exit
!
interface port EXT24
        name "TO_C6K_TEN3/4"
        tagging
        pvid 10
        exit
!
…
!
interface port EXT21
        lacp mode active
        lacp key 121
!
interface port EXT22
        lacp mode active
        lacp key 121
!
interface port EXT23
        lacp mode active
        lacp key 121
!
interface port EXT24
        lacp mode active
```

```
        lacp key 121
!
!
```

```
Flex#sh lldp remote-device
LLDP Remote Devices Information

LocalPort | Index | Remote Chassis ID         | Remote Port          | Remote System Name
----------|-------|---------------------------|----------------------|-------------------
EXT21     | 6     | 00 1a 2f 00 a0 d6         | TO_Flex_EXT21        | C6K.cisco.com
EXT22     | 7     | 00 1a 2f 00 a0 d7         | TO_Flex_EXT22        | C6K.cisco.com
EXT23     | 8     | 00 1a 2f 00 a0 d8         | TO_Flex_EXT23        | C6K.cisco.com
EXT24     | 9     | 00 1a 2f 00 a0 d9         | TO_Flex_EXT24        | C6K.cisco.com
```

```
Flex#sh lacp aggregator
Aggregator Id  49
-----------------------------------------------
Aggregator MAC address  - 08:17:f4:76:78:86
Actor System Priority   - 32768
Actor System ID         - 08:17:f4:76:78:00
Individual              - FALSE
Actor Oper Key          - 121
Partner System Priority - 32768
Partner System ID       - 00:19:07:a9:07:00
Partner Oper Key        - 100
ready                   - TRUE
Min-Links               - 1
Number of Ports in aggr - 4
index  0    port EXT21
index  1    port EXT22
index  2    port EXT23
index  3    port EXT24
```

```
Flex#sh int status
-------------------------------------------------------------------
Alias   Port   Speed    Duplex     Flow Ctrl      Link       Name
------- ----   -----   --------  --TX-----RX--   ------     ------
…

EXT21    49     10000     full      no     no       up       TO_C6K_TEN3/1
EXT22    50     10000     full      no     no       up       TO_C6K_TEN3/2
EXT23    51     10000     full      no     no       up       TO_C6K_TEN3/3
EXT24    52     10000     full      no     no       up       TO_C6K_TEN3/4
MGT1     53      1000     full      no     no       up       MGT1
```

```
Flex#sh lacp information
port    mode    adminkey  operkey  selected   prio  aggr  trunk  status  minlinks
-------------------------------------------------------------------------------------
…
EXT21   active       121      121    yes     32768    49     53    up        1
EXT22   active       121      121    yes     32768    49     53    up        1
EXT23   active       121      121    yes     32768    49     53    up        1
EXT24   active       121      121    yes     32768    49     53    up        1
```

```
Flex#sh lacp aggregator
```

```
Aggregator Id  49
---------------------------------------------
Aggregator MAC address  - 08:17:f4:76:78:86
Actor System Priority   - 32768
Actor System ID         - 08:17:f4:76:78:00
Individual              - FALSE
Actor Oper Key          - 121
Partner System Priority - 32768
Partner System ID       - 00:19:07:a9:07:00
Partner Oper Key        - 100
ready                   - TRUE
Min-Links               - 1
Number of Ports in aggr - 4
index  0    port EXT21
index  1    port EXT22
index  2    port EXT23
index  3    port EXT24

Flex#show spanning-tree
Spanning Tree is shut down.
```

A

Troubleshooting

The methodology and commands that are used for troubleshooting connectivity problems are described in this appendix. A sample of network documentation also is provided.

In this Redpaper, the focus thus far has been placed on Layer 2. Therefore, the focus of this appendix is on problems about Ethernet, VLANs, and spanning tree.

In the first part, we describe a useful troubleshooting methodology. In the second part, you find the most common commands to show and verify the status of the configuration, which help you to track down the root cause of your problem. The last part of the appendix shows a sample of network documentation, which is the information you need with which to troubleshoot.

This appendix includes the following topics:

- Basic troubleshooting for connectivity problems
- Baseline documentation
- Firmware update of IBM Flex System network switches

Nexus 5000 switch upgrades: For more information about how to upgrade NX-OS for the Nexus 5000 Series switches, see this website:

http://www.cisco.com/en/US/products/ps9670/products_configuration_example09186a0080b4b9dd.shtml

Basic troubleshooting for connectivity problems

This section describes basic troubleshooting techniques.

Approach

This basic Layer 2 troubleshooting guideline supports you when you are looking for connectivity problems of adjacent devices. These devices are devices that should be able to communicate with each other on Layer 2. This configuration might be two hosts in the same VLAN or a host and its default gateway.

The following symptoms often indicate a problem:

- Failing application or failing pings between adjacent devices.
- Address resolution protocol (ARP) failures (missing or “incomplete” ARP entry).
- Missing packets on the receiving host that are shown with a packet sniffer.

Verify connectivity

Before you are start troubleshooting on Layer 2, you should verify the following connectivity configurations on Layer 3:

- Ping the two devices from each other. Do you receive an Internet Control Message Protocol (ICMP) echo in one or other direction?

  If you do not receive an echo, the following causes for a ping failure are possible:

  - A Firewall or personal firewall on a host
  - Wrong or missing default gateway (DGW)
  - Wrong IP subnet mask

- Verify that the ARP caches on the devices. Even if a ping does not work, it is possible that the address resolution protocol (ARP) did work. This status indicates a working Layer 2 link and a problem on the IP level (Layer 3). Even if the ping fails, the ARP entries should be verified.

Determine the Layer 2 path

When you are at the point that your problem seems to be a Layer 2 or Layer 1 problem, you want to reduce the scope of the potential failures. This common troubleshooting method might help you to diagnose your problem.

In the first step, it is useful to determine the expected Layer 2 path that is based on documentation, baselines, and general knowledge of the network. Determining the Layer 2 path shows the path that the traffic is expected to take between the two affected hosts. The analysis results indicate a good starting point for the next steps of gathering information about what is happening in the network, and make it easier to detect abnormal behavior.

Track the traffic flow across the Layer 2 path

The second step is to follow the expected path and verify that the links are up and forwarding traffic. If the actual path is different from the expected path, this conflict can indicate where to proceed with troubleshooting, what links and protocols are involved, and might cause the failure. Often included in this process is comparing the spanning tree topology against the expected Layer 2 topology. If the actual topology differs from the expected, this difference might give some clue about the cause of the problem.

Verification of traffic flows can be done by showing MAC address tables, interface statistics, and so on.

Analyze links

After you find a divergence between the expected and the current traffic path, you should examine the links to determine where the expected path is broken. You can start to target troubleshooting commands to narrow down the root cause of the problem. Even if you cannot figure out on yourself the root cause, you can establish a good base of information and documentation for problem escalation.

Figure A-1 shows an overview of the troubleshooting steps.

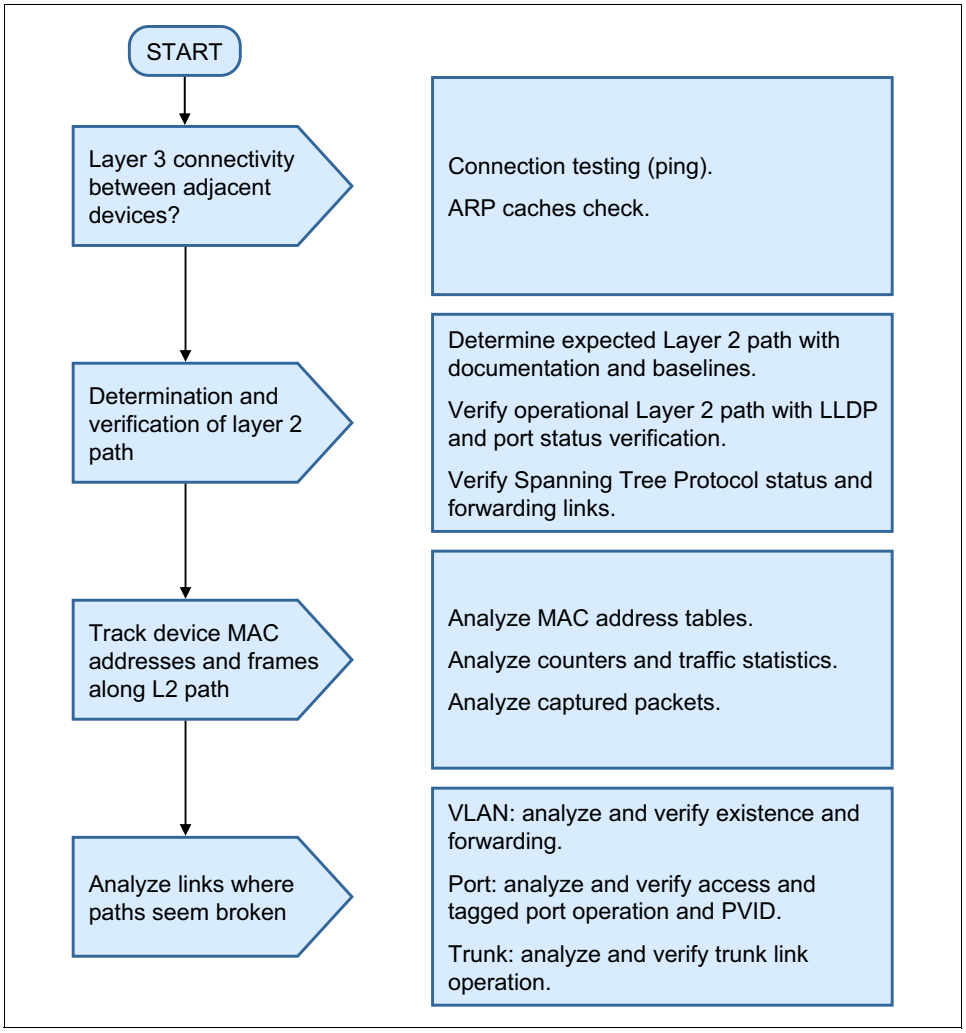

Figure A-1 Troubleshooting flowchart

Layer 2 troubleshooting commands

The following commands are listed according to the workflow that we described in the previous section.

Verify connectivity

Verify the connectivity by using the following ping:

```
ping 10.1.1.1
```

Verify the ARP cache

When you start a ping, the host needs to know the destination MAC address first so it can address the Ethernet frame properly. To determine the destination MAC address, the host sends an ARP request frame, which is responded to with an ARP reply. The ARP reply contains the destination IP and MAC address. This information is stored in the ARP cache, often for a few minutes.

If the ping failed and you can find the destination MAC address in the ARP cache, this result is a strong indication that your Layer 2 connectivity is working. You might experience problems with a firewall or other security measures on a device.

Use the following commands to display the ARP cache:

- On a Windows host: `arp –a`
- On the switch: `show ip arp`

Determination of Layer 2 path

You use the existing network documentation and compare the current network condition against it. If the documentation is missing, you document the current network situation by using the following command results as input:

- Use the following commands to verify which interfaces are up, duplex, speed, and so on:
  - IBM: `show interface link`
  - Cisco: `show interfaces status`
- Use the following commands to verify the mapping of ports and VLANs:
  - IBM: `show interface information`
  - Cisco: `show interface trunk`
- Use the following commands to verify the interconnection of switches and routers:
  - IBM: `show lldp remote-device`
  - Cisco: `show lldp neighbors`
- Use the following commands to verify the forwarding of traffic on links:
  - IBM and Cisco: `show spanning-tree`
  - IBM and Cisco: `show interface counters`
- Use the following commands to verify the LACP trunks:
  - IBM: `show portchannel information`
  - Cisco: `show etherchannel summary`

Tracking traffic along L2 path

After you know what your actual network looks like, you can track the flow of traffic across it. This tracking is best done by tracking MAC addresses. Every switch holds a table of MAC addresses. The table is built and updated with every new Ethernet frame that crosses the switch by putting the source MAC address and the switchport ID where the frame entered the switch into the MAC address table. This information is needed by the switch when an Ethernet frame is forwarded to the specific MAC address. Any destination MAC address can be mapped to a switchport.

If a frame is to be forwarded but there is no valid entry in the MAC address table, the frame is broadcasted on all ports, except the port where the frame entered the switch. There are instances in which this configuration makes sense to clear the table, initiate some traffic, and verify it again.

Reviewing this table shows you where the switch sees the device with that specific MAC address connected.

Use the following commands to show the current content of the table:

- IBM: `show mac-address-table`
- Cisco: `show mac address-table`

Use the following commands to clear the current content of the table:

- IBM: `clear mac-address-table`
- Cisco: `clear mac address-table`

Analyze links where path seems broken

When you find a path that seems to be broken, the following commands can help to analyze the root cause of the problem:

- Use the following commands to verify the existence and the correct forwarding of the VLANs:
  - IBM and Cisco: `show vlan`
  - IBM: `show interface information`
  - Cisco: `show interface switchport`
  - IBM and Cisco: `show spanning-tree`
- Use the following commands to verify the correct membership and tagging on the switch ports and interswitch links:
  - IBM: `show interface information`
  - Cisco: `show interface trunk`
  - Cisco: `show interface status`

Baseline documentation

Experience shows that documenting a network is a difficult task. Often there is too much or not enough information, or the information is not what you need.

To simplify the effort of creating and reading the documentation of a network, it might make sense to separate the documentation by OSI Layers 1, 2 and 3. Each of these layers is reflected by its own configuration in the network devices. You also can troubleshoot the layers individually. The following drawings shall show a simple network:

Figure A-2 on page 182 shows the cabling, devices, naming convention that is used, and ports of OSI Layer 1.

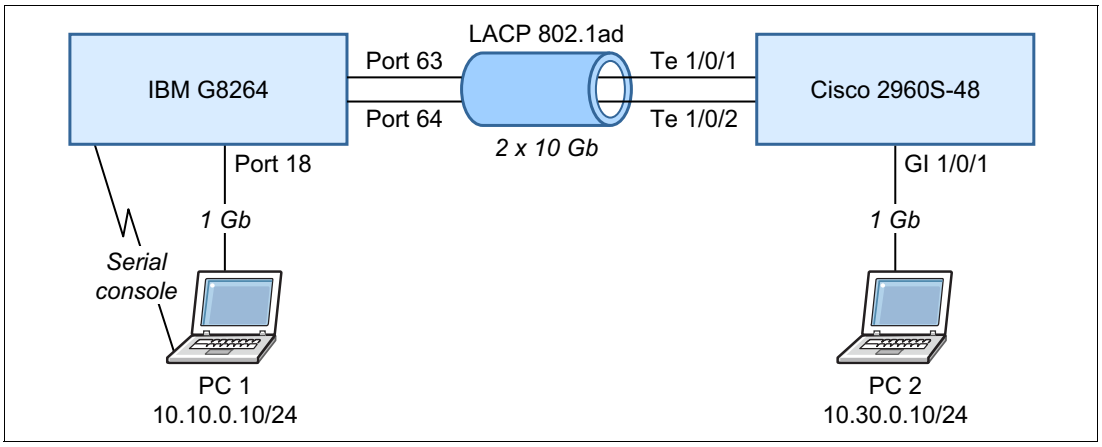

Figure A-2 OSI Layer 1

Figure A-3 shows the VLANs, ports, VLAN membership, tagging, and PVID of OSI Layer 2.

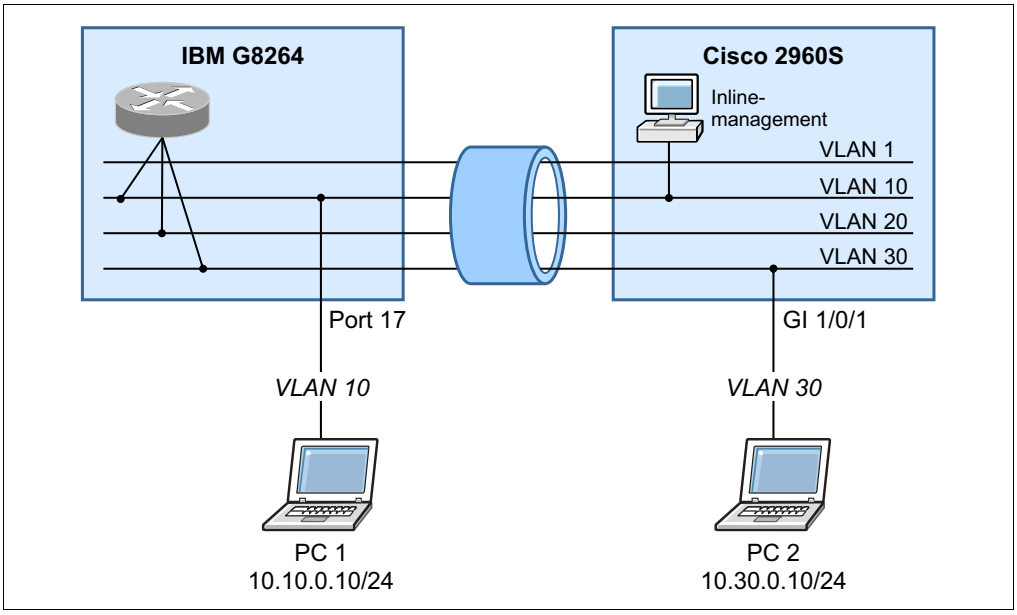

Figure A-3 OSI Layer 2

Figure A-4 shows the IP subnets, routes, and default gateway of OSI Layer 3.

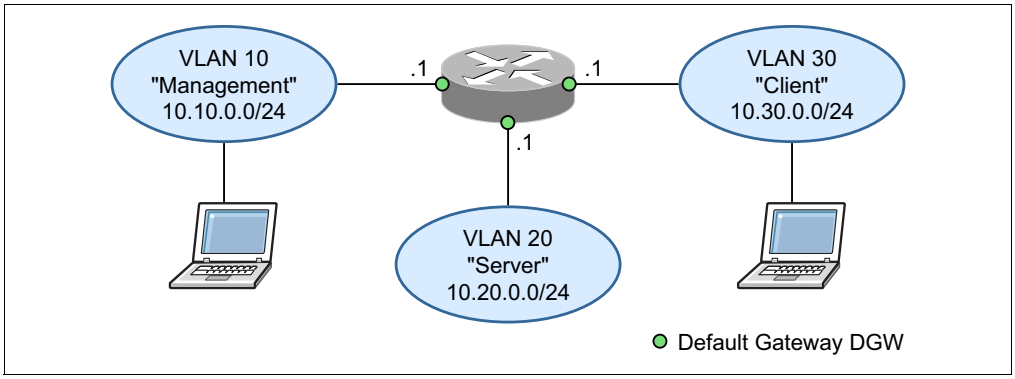

Figure A-4 OSI Layer 3

Additional useful information for baseline documentation

The following useful information also is used in baseline documentation:

- Average and peak bandwidth for switch-to-switch links and switch-to-server links.
- Average rate of broadcasts and multicasts in the network.
- Software version that is used and the date of last firmware update.

Firmware update of IBM Flex System network switches

The Ethernet switch firmware can be updated by using one of the following methods:

- The use of a graphical user interface (GUI)
- Through Flex System Manager (FSM) by using the Update Manager
- The use of the Command-line Interface (CLI)

If there an FSM module is not installed, you can use one of the following ways to update the firmware of the integrated network switches.

For more information, see the IBM Flex System Information Center at this website:

http://publib.boulder.ibm.com/infocenter/flexsys/information/topic/com.ibm.acc.networkdevices.doc/network_iomodule.html

Update the switch by using the web-based GUI

Complete the following steps to update the switch by using the browser-based GUI:

1. Go to the IBM Fix Central website: http://ibm.com/support/fixcentral/options
2. Select the choices as shown in Figure A-5 on page 184 and click **Continue**.

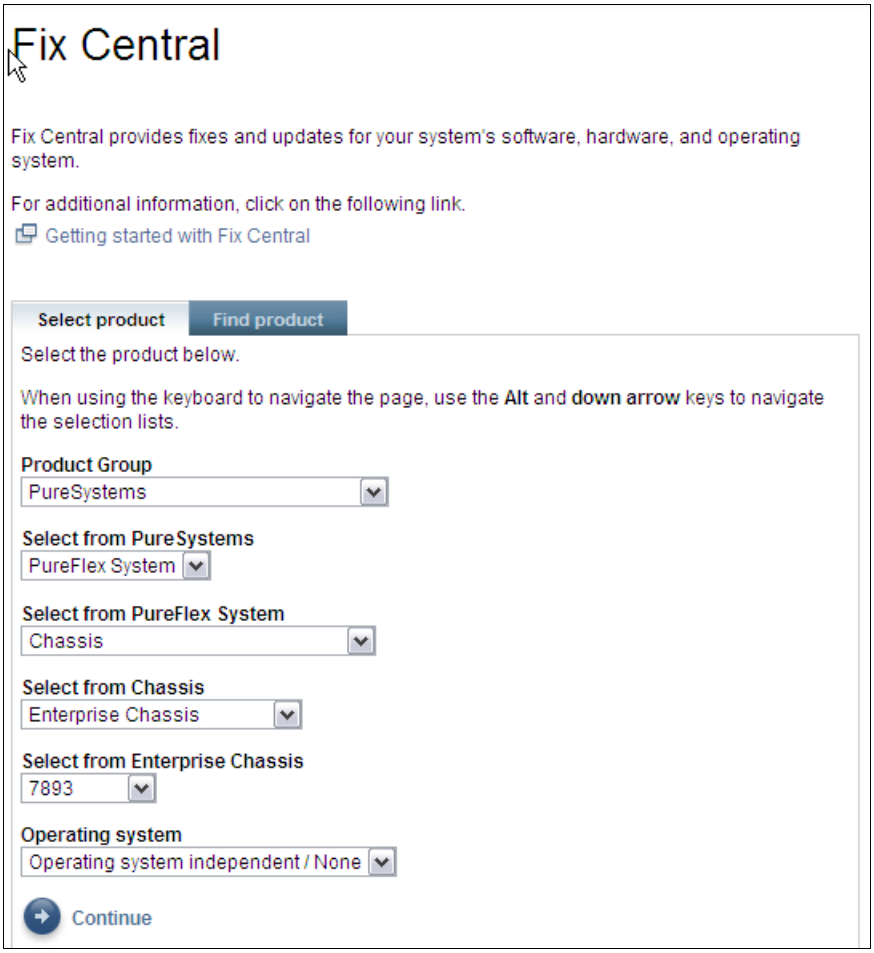

Figure A-5 Fix Central window

3. Select the products that you want to install and click **Continue**, as shown in Figure A-6.

Figure A-6 Selecting fixes

4. Log in by using your IBM ID and select your preferred download, as shown in Figure A-7 on page 185.

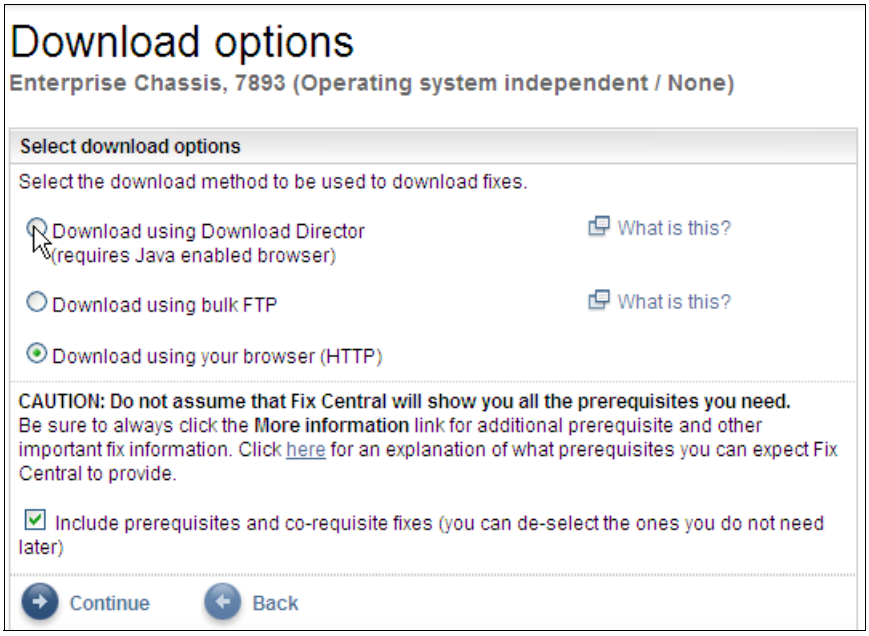

Figure A-7 Download options

5. Accept the terms and conditions.
6. Download the Firmware package.
7. Check the readme file for updates of the update process.
8. Extract the boot and OS image files into a directory.

   The compressed file that contains the following files and directories:

   – Boot image: `ibm_fw_scsw_en2092-7.2.2.2_anyos_noarch_Boot.img`
   – OS image: `ibm_fw_scsw_en2092-7.2.2.2_anyos_noarch_OS.img`
   – A directory that contains the MIB files
9. Establish a connection between the Ethernet port of the Chassis Management Module (CMM) and the machine that is running the browser.

   For more information about how to configure an IP address on a Switch module, see the CMM documentation.
10. Enter the IP address of the Switch and log in to the browser-based user interface (BBI) by using the following credentials:

    – Username (default): admin (or USERID)
    – Password (default): admin (or PASSW0RD)
11. Click the **Configure** tab, as shown in Figure A-8 on page 186.
12. From the left-tree view, click **IBM Flex System EN2092 10 Gb Switch** → **System** → **Config/Image Control**.
13. Scroll down to the Image Settings group, as shown in Figure A-8 on page 186, and complete the following steps:

    a. In the **Image for Transfer** menu, select the wanted OS image bank.

    b. Click **Browse** and browse to your local file system to select the OS image file: `ibm_fw_scsw_en2092-7.x.x.x_anyos_noarch_OS.img`.

    c. Click **Download via Browser**.

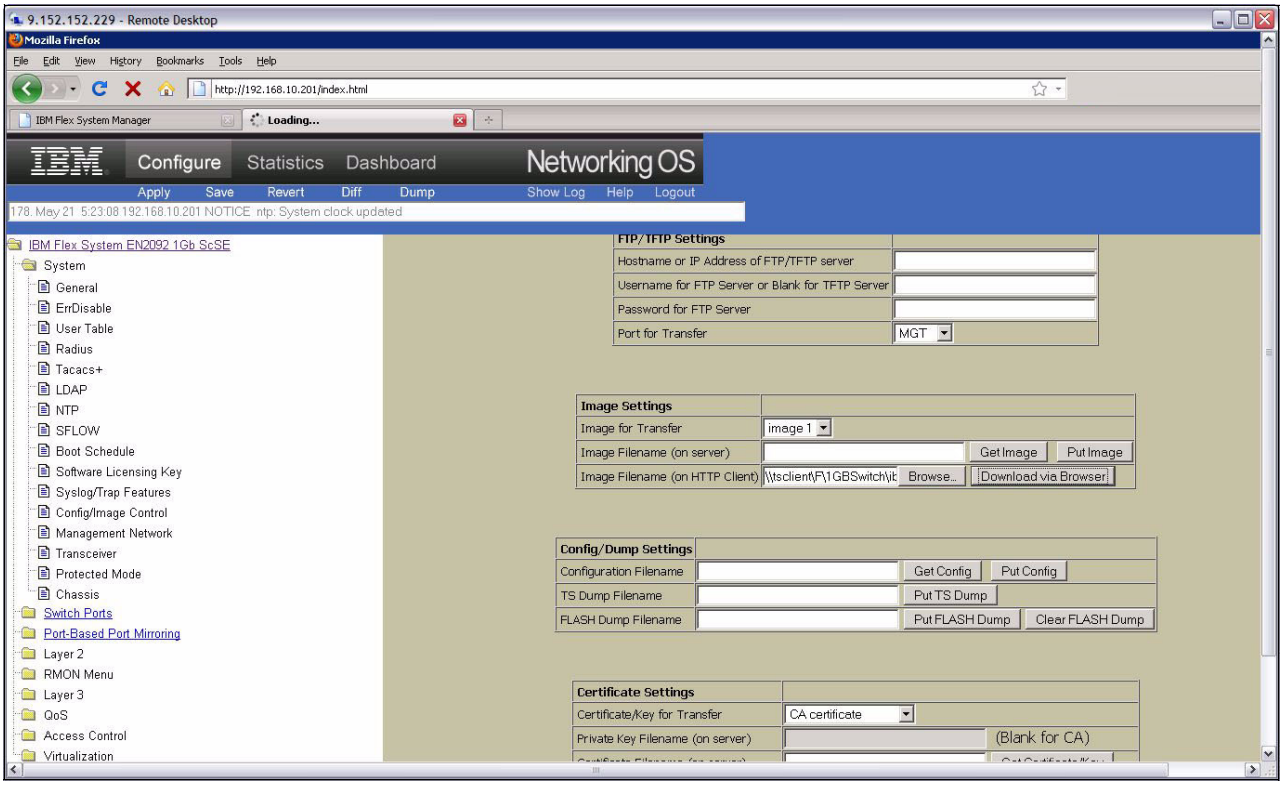

Figure A-8 Updating the firmware

The file transfer begins, followed by flashing non-volatile memory on the Switch. When the operation completes, the browser window returns and you see the following message at the bottom of the page:

```
Status of Previous Transfer ...
... Image downloaded via Browser ibm_fw_scsw_en2092-7.x.x.x_anyos_noarch_OS.img
- Successful
***If you want to update both image banks, repeat step e above for the second
image bank before updating the boot image below.
```

Do not reset: Do not reset or boot the switch between the OS and boot upgrades.

14. Repeat step 13 on page 185 and select the boot image from the menu and select the `ibm_fw_scsw_en2092-7.x.x.x_anyos_noarch_Boot.img` file.

    The file transfer begins, followed by flashing non-volatile memory on the Switch. When the operation completes, the browser window returns and you see the following message at the bottom of the page:

    ```
    Status of Previous Transfer …
    ... Image downloaded via Browser ibm_fw_scsw_en2092-7.x.x.x_anyos_noarch
    _Boot.img - Successful
    ```

15. Set the **Next Boot Image Selection** to the image bank (1 or 2) that contains the new firmware, as shown in Figure A-9 on page 187.
16. Click **Submit** at the bottom of the page.
17. Click **REBOOT!** at the bottom of the page.
18. Wait for the switch to reboot.

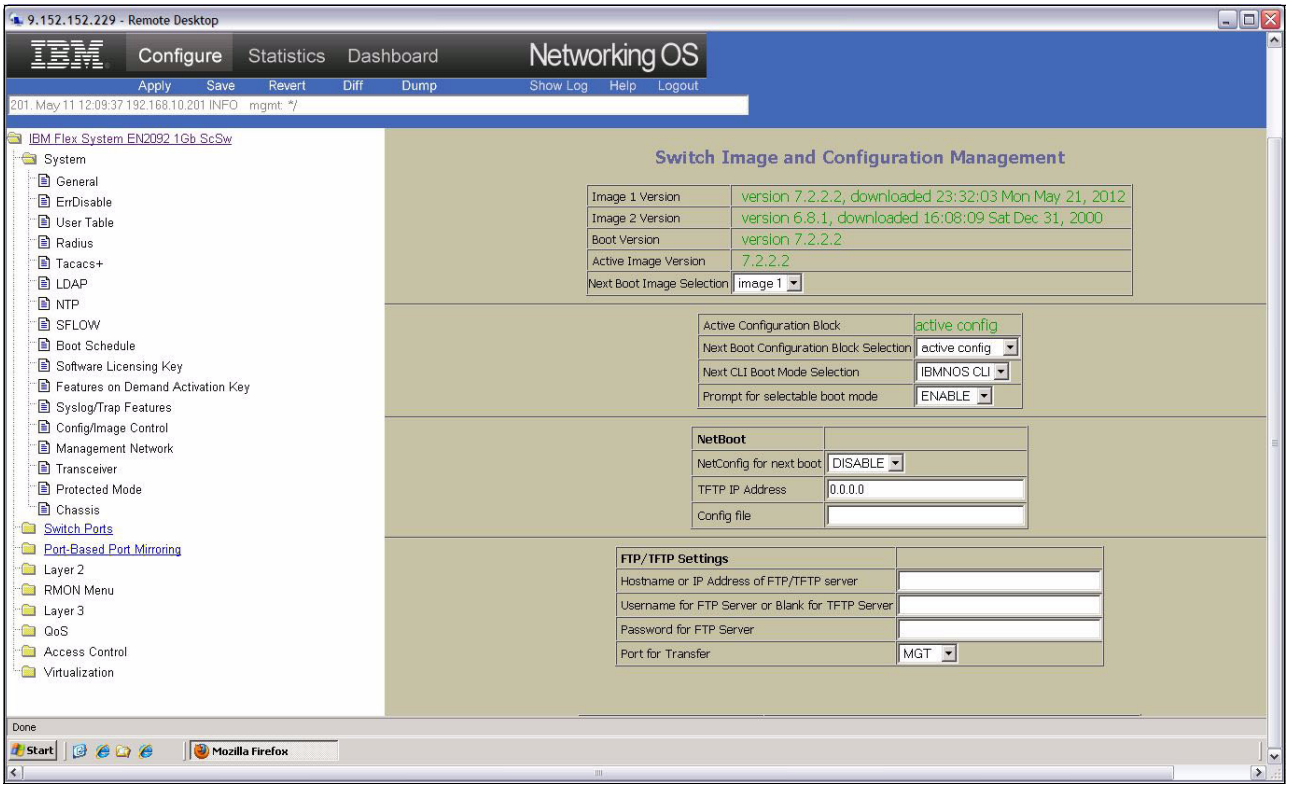

Figure A-9 Completing the firmware update

Using SSHv2 or Telnet

This method uses a Trivial File Transfer Protocol (TFTP) or File Transfer Protocol (FTP) server to update the switch firmware. Often, this server is installed on a machine that is reachable from the switch through the management module. However, when the switch is appropriately configured, the server can be attached to the external management port or an external or internal data port.

Important: Telnet is disabled by default. Unless you previously enabled telnet, use SSHv2.

Complete the following steps to use SSHv2 or Telnet:

1. Download the compressed VFSS software package file to the machine where the TFTP (or FTP) server is located.
2. Extract the boot and OS image files into a directory. Enable the server and set its default directory to the one in which the image files is located.
3. Establish a connection between the Ethernet port of the Management Module and the TFTP Server. For more information about configuring an IP address on a Switch module, see the CMM documentation.
4. Open a session by using the IP address of the Switch and log in to the VFSS Command Line Interface (CLI) by using the following credentials:
   - Username (default): admin (or USERID)
   - Password (default): admin (or PASSW0RD)

5. Upgrade the OS image by entering the following command:

   `/boot/gtimg X TADDR Ibm_fw_scsw_en2092-7.x.x.x_anyos_noarch_OS.img`

   Where:

   – X = 1 or 2 (determined by the image bank you want to use)
   – TADDR = IP address of the TFTP Server

   It is recommended that you retain the previous OS version by loading the upgrade into the other image block and then reset the switch by using the new image. Use the `/boot/image` command to select the preferred image. Leave the user name blank for TFTP (press Enter and answer “Y” to the confirmation question). Wait for the upgrade to complete successfully.

   Important: Do not reset the switch between the OS and boot upgrades.

6. Upgrade the boot image by entering the following command:

   `/boot/gtimg boot TADDR Ibm_fw_scsw_en2092-7.x.x.x_anyos_noarch_Boot.img`

   Leave the user name blank for TFTP (press Enter and answer 'Y' to the confirmation question). Wait for the upgrade to complete successfully.

7. After the boot upgrade completes, reset the switch by using the following command:

   `/boot/reset`

   You must reset the switch to activate the new image.

   When you reset the switch, it boots by using the selected image (1 or 2). Ensure that you are booting from the upgraded image by running the `/boot/cur` command.

   A switch reset completes in approximately 60 seconds.

8. After rebooting, you can verify the firmware version by using the `show version` command, as shown in Example A-1 on page 189.

Example: A-1 Verifying the firmware version

```
Router>show version
System Information at 23:48:16 Mon May 21, 2012
Time zone: America/US/Pacific
Daylight Savings Time Status: Disabled

IBM Flex System EN2092 1Gb Ethernet Scalable Switch

Switch has been up for 0 days, 0 hours, 4 minutes and 9 seconds.
Last boot: 23:46:05 Mon May 21, 2012 (reset from Telnet/SSH)

MAC address: 08:17:f4:76:78:00    IP (If 1) address: 0.0.0.0
Management Port MAC Address: 08:17:f4:76:78:ef
Management Port IP Address (if 128): 192.168.10.201
Software Version 7.2.2.2 (FLASH image1), active configuration.


Hardware Part Number        : 49Y4295
Hardware Revision           : 00
Serial Number               : Y050VT16E0AK
Manufacturing Date (WWYY)   : 3711
PCBA Part Number            : BAC-00079-00
PCBA Revision               : 0
PCBA Number                 : 00
Board Revision              : 00
PLD Firmware Version        : 1.3

Temperature Warning         : 36 C (Warn at 60 C/Recover at 55 C)
Temperature Shutdown        : 36 C (Shutdown at 65 C/Recover at 60 C)
Temperature Inlet           : 33 C
Temperature Exhaust         : 36 C
Temperature Local           : 35 C
Temperature Remote 1        : 54 C
Temperature Remote 2        : 42 C
Temperature Remote 3        : 42 C
Temperature Phy 0x01        : 54 C
Temperature Phy 0x09        : 45 C
Temperature Phy 0x11        : 45 C

Power Consumption           : 37.980 W (12.408 V,  3.061 A)

Switch is in I/O Module Bay 1

Router>
```

Abbreviations and acronyms

ARP	Address Resolution Protocol
BBI	browser-based interface
BPDU	Bridge protocol data unit
CDP	Cisco Discovery Protocol
CLI	command-line interface
CMM	Chassis Management Module
DA	destination address
DGW	default gateway
DOCSIS	Data Over Cable Service Interface Specification
FDB	forwarding database
FSM	Flex System Manager
FTP	File Transfer Protocol
GE	Gigabit Ethernet
GUI	graphical user interface
ICMP	Internet control message protocol
ID	identifier
IEEE	Institute of Electrical and Electronics Engineers
IGMP	Internet Group Management Protocol
IP	Internet Protocol
ISCLI	industry standard command line interface
ISL	Inter-Switch Link
ITSO	International Technical Support Organization
LACP	Link Aggregation Control Protocol
LACPDU	LACP Data Units
LAG	link aggregate group
LAN	local area network
LCAP	Link Aggregation Control Protocol
LLDP	Link Layer Discovery Protocol
MAC	media access control
MEC	Multichassis Ether Channel
MIB	management information base
MLT	Master Latency Timer
MST	Multiple Spanning Tree
MSTP	Multiple Spanning Tree Protocol
MTU	maximum transmission unit
OS	operating system
OSI	Open Systems Interconnect
OUI	organizationally unique identifier
PC	personal computer
PDU	power distribution unit
PVRST	Per VLAN Rapid Spanning Tree
PVST	Per-VLAN Spanning Tree
RMON	Remote Monitoring
RSS	Receive-side scaling
RSTP	Rapid Spanning Tree Protocol
SA	source address
STP	Spanning Tree Protocol
TCA	Target Channel Adapter
TCN	Topology Change Notification
TFTP	Trivial File Transfer Protocol
TTL	time to live
VLAG	Virtual Link Aggregation Groups
VLAN	virtual LAN

Related publications

The publications that are listed in this section are considered particularly suitable for a more detailed discussion of the topics that are covered in this paper.

IBM Redbooks

The following IBM Redbooks publications provide additional information about the topics in this document. Note that some publications referenced in this list might be available in softcopy only:

- *Implementation of IBM j-type Ethernet Switches and Routers*, SG24-7882
- *IBM Flex System Networking in an Enterprise Data Center*, REDP-4834
- *IBM PureFlex System and IBM Flex System Products and Technology*, SG24-7984
- *IBM Flex System EN2092 1Gb Ethernet Scalable Switch*, TIPS0861
- *IBM Flex System Fabric EN4093 10Gb Scalable Switch*, TIPS0864

You can search for, view, download, or order these documents and other Redbooks, Redpapers, Web Docs, draft, and additional materials at the following website:

http://www.ibm.com/redbooks

Other publications

The following publications are also relevant as further information sources:

- IBM RackSwitch G8264 Application Guide (6.8):

  http://ibm.com/support/docview.wss?uid=isg3T7000464
- Virtual PortChannel Quick Configuration Guide:

  http://www.cisco.com/en/US/prod/collateral/switches/ps9441/ps9670/configuration_guide_c07-543563.html
- Cisco Nexus 5000 Series NX-OS Software Configuration Guide, Configuring Multiple Spanning Tree:

  http://www.cisco.com/en/US/docs/switches/datacenter/nexus5000/sw/configuration/guide/cli_rel_4_0_1a/MST.html

Online resources

The following websites are also relevant as further information sources:

- ProCurve & Cisco Spanning Tree Interoperability

  http://cdn.procurve.com/training/Manuals/ProCurve-and-Cisco-STP-Interoperability.pdf

- Best Practice for configuring HP procurve with Cisco switch forum

  http://h30499.www3.hp.com/t5/Switches-Hubs-Modems-Legacy-ITRC/Best-Practice-for-configuring-HP-procurve-with-Cisco-switch/td-p/4701340

- Radia Perlman, Intel Labs, Donald Eastlake, Huawei Technologies, Introduction to Trill, The Internet Protocol Journal, Volume 14, No. 3:

  http://www.cisco.com/web/about/ac123/ac147/archived_issues/ipj_14-3/143_trill.html

Help from IBM

IBM Support and downloads

ibm.com/support

IBM Global Services

ibm.com/services

Deploying IBM Flex System into a Cisco Network

Learn how to integrate IBM Flex System into your network

See real life Layer 2 configurations with Flex System switches

Find out how easy it is to connect network devices

This IBM Redpaper publication provides information on how to integrate IBM Flex System into an existing customer network. It focuses on interoperability and seamless integration from the network perspective.

The paper describes the complete configuration of the most common scenarios. It guides you through several setups, and shows in detail how to configure the network switches, and how to verify the functionality and proper operation.

This paper can help you to easily configure and monitor your Layer 2 setup. Typical well established Layer 2 Network setups use combinations of Spanning Tree Protocol, VLANs and link aggregation.

Scenarios described in this paper includes the use of these switching products:

- Cisco Nexus 5000 (including vPC)
- Cisco Catalyst 6500
- IBM RackSwitch (including VLAG)
- IBM Flex System Ethernet Scalable Switch (including VLAG)

We describe the use of these switches with each of the following Spanning Tree Protocol (STP) configurations:

- RSTP (Rapid STP)
- MSTP (Multiple STP)
- PVRST (Per VLAN Rapid STP)
- STP disabled

The paper is aimed at network administrators familiar with Cisco network products. It uses the industry standard command-line interface (isCLI) as management interface and we assume the reader is familiar with Cisco products and the use of isCLI.

REDP-4901-00

INTERNATIONAL TECHNICAL SUPPORT ORGANIZATION

BUILDING TECHNICAL INFORMATION BASED ON PRACTICAL EXPERIENCE

IBM Redbooks are developed by the IBM International Technical Support Organization. Experts from IBM, Customers and Partners from around the world create timely technical information based on realistic scenarios. Specific recommendations are provided to help you implement IT solutions more effectively in your environment.

For more information:
ibm.com/redbooks