Lenovo ThinkSystem Micro Datacenter 6U Rack Cabinets

Product Guide

Lenovo ThinkSystem 6U Micro Datacenter rack offerings are industry-standard 19-inch server cabinets that are designed for rack servers that are to be deployed outside of traditional data centers. The rack cabinets offer a small footprint by orienting the installed servers vertically in the rack. They allow IT managers to create turn-key solutions for branch office and retail environments where a standardized, repeatable configuration is needed to be rolled out.

They are optimized to expedite installation and rollout, simplify cable management, and increase accessibility for improved serviceability. The 6U cabinets are all hold 6U of rack equipment and are available in three different depths:

- 800mm depth
- 1200mm depth
- 1200mm depth with an additional acoustic door (a total of 1490mm depth)

The following figure shows the ThinkSystem Micro Datacenter 6U Acoustic 1200mm Deep Rack Cabinet.

Figure 1. ThinkSystem Micro Datacenter 6U Acoustic 1200mm Deep Rack Cabinet

Did you know?

The 6U racks are standard 19-inch rack cabinet offerings that enable faster deployment and scalability for Edge computing. They are suitable when you need data center-quality standards in your edge infrastructure and provide you with better compliance and security.

Models

The following table lists the ordering information for the 6U Micro Datacenter racks.

Table 1. Models and base feature codes

Description	CTO base models		Base feature
	1 year warranty	3 year warranty	
6U 800mm Deep Micro Datacenter Rack	7D3FCTO1WW	7D3GCTO1WW	BAFP
6U 1200mm Deep Micro Datacenter Rack	7D3HCTO1WW	7D3JCTO1WW	BAFN
6U Acoustic 1200mm Deep Micro Datacenter Rack	7D2ACTO1WW	7D2MCTO1WW	BAFN

The racks contain the following items:

- One rack cabinet
- Removable and reversible lockable front and rear doors
- Left and right removable lockable side panels
- Key for locks
- Two bolt-down brackets (front & rear)
- Hardware kit containing screws, cage & flange nuts, installation wrenches, and cable ties
- Shipping pallet

Features and specifications

The features of the 6U racks include:

- 800mm and 1200mm deep designs help minimize the space occupied by the rack, allowing you to select the rack based on the servers to be installed in it.
- Servers and other rack devices are mounted vertically
- 800mm deep rack can optionally be mounted on a wall
- Acoustic rack allows servers to operate in quiet environments (noise reduction approximately 6-10 db)
- Can be shipped fully loaded
- Casters to easily roll the rack cabinet for ease of installation
- Supports the ability for the cabinet to be crane lifted if needed
- Lockable, removable and reversible front and rear doors
- Lockable side panels
- Adjustable leveling pads to ensure stability and prevent rolling on casters
- Cable access holes on the top of the rack, both front and rear, for cable management
- Includes outriggers for additional stability while moving the rack

The following figure shows the external features of the rack cabinets.

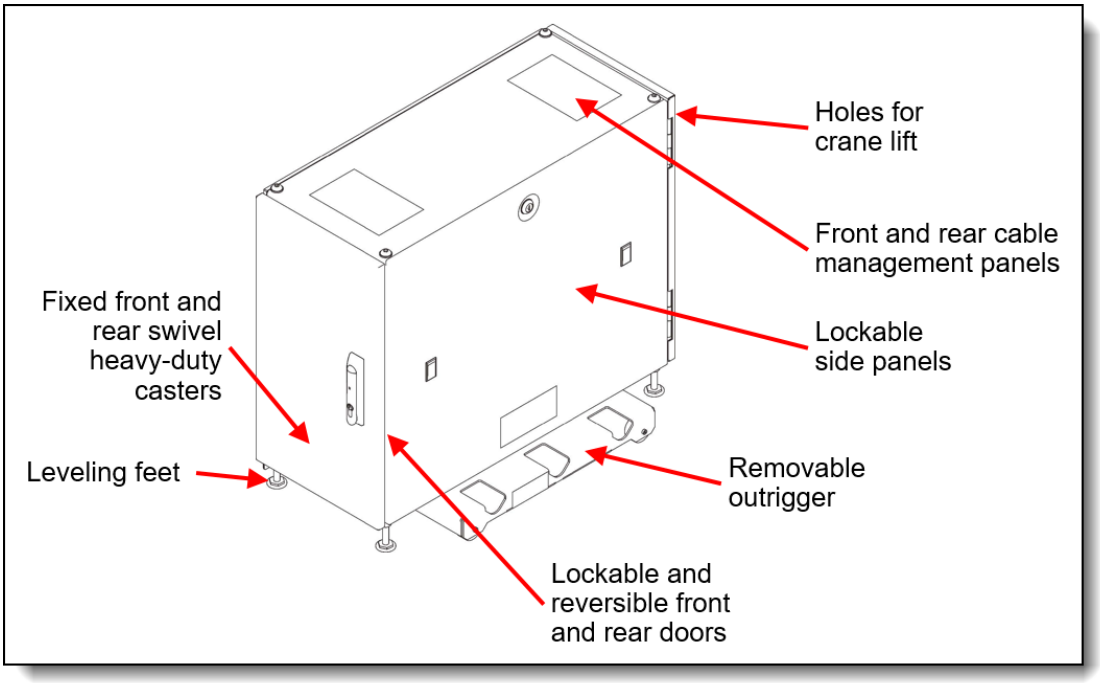

Figure 2. Features of the 6U rack cabinets (800mm rack shown)

The following table compares the power specifications of the racks.

Table 2. Specifications

Description	6U 800mm Deep Micro Datacenter Rack	6U 1200mm Deep Micro Datacenter Rack	6U Acoustic 1200mm Deep Micro Datacenter Rack
Machine type	7D3F (1 year) 7D3G (3 year)	7D3H (1 year) 7D3J (3 year)	7D2A (1 year) 7D2M (3 year)
Rack units	6U	6U	6U
Can be shipped with servers installed	Yes	Yes	Yes
Removable lockable side panels	Yes	Yes	Yes
0U PDU tool-less mounting points	None	None	None
1U side-wall compartments (pockets)	None	None	None
External height	678 mm (26.7 in)	678 mm (26.7 in)	678 mm (26.7 in)
External depth	800 mm (31.5 in)	1200 mm (47.3 in)	1490 mm (58.7 in)
External width without outriggers	337 mm (13.3 in)	337 mm (13.3 in)	337 mm (13.3 in)
External width with outriggers	503 mm (19.8 in)	503 mm (19.8 in)	503 mm (19.8 in)
Rack weight (empty) without outriggers	44 kg (97 lb)	64 kg (141 lb)	82 kg (181 lb)
Rack weight (empty) with outriggers	54 kg (119 lb)	74 kg (163 lb)	92 kg (203 lb)
Static load capacity	120 kg (265 lb)	120 kg (265 lb)	120 kg (265 lb)
Dynamic load capacity	120 kg (265 lb)	120 kg (265 lb)	120 kg (265 lb)

Wall mount support

The 6U 800mm Deep Micro Datacenter Rack supports mounting on a wall for configure-to-order (CTO) orders. The installation requires trained technicians to perform the work. Ordering information is in the following table.

Table 3. Wall bracket for 6U 800mm Deep Micro Datacenter Rack

Part number	Feature code	Description
CTO only	BBD1	Iot 6U Short Wall Mounting Bracket Assembly

The following figure shows how the 800mm rack cabinet is mounted to the wall.

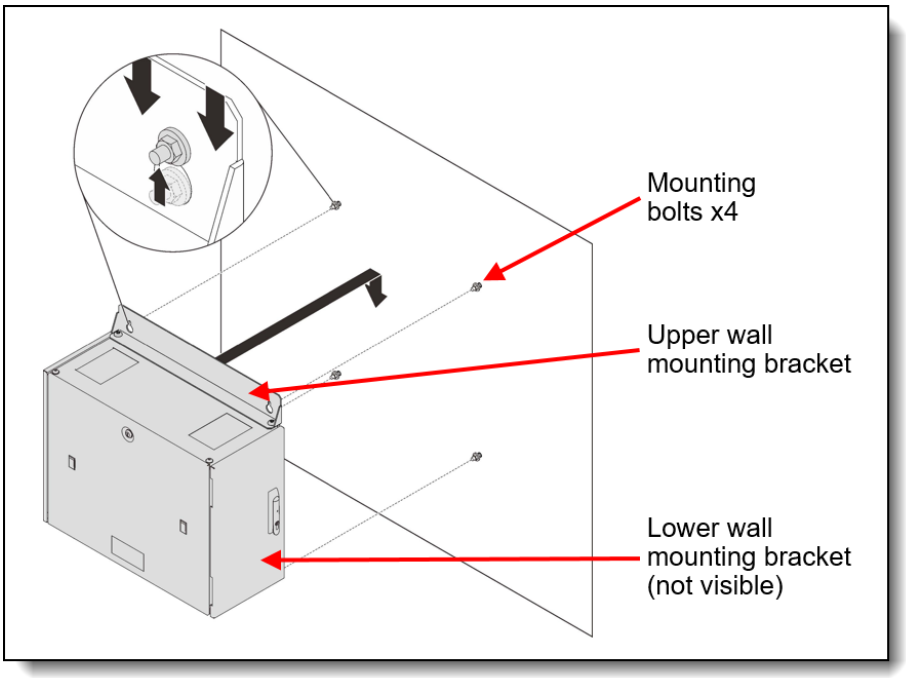

Figure 3. Mounting the 6U 800mm rack cabinet on a wall

Server support

The following table summarizes the ThinkSystem server support for the 6U rack cabinets. The numbers listed in the server columns represent the number of servers that can be installed in each rack cabinet.

Table 4. Server support (Part 1 of 4)

		2S AMD V3				2S Intel V3			4S 8S Intel V3			Multi Node			GPU Rich		1S V3	
Part Number	**Description**	**SR635 V3 (7D9H / 7D9G)**	**SR655 V3 (7D9F / 7D9E)**	**SR645 V3 (7D9D / 7D9C)**	**SR665 V3 (7D9B / 7D9A)**	**ST650 V3 (7D7B / 7D7A)**	**SR630 V3 (7D72 / 7D73)**	**SR650 V3 (7D75 / 7D76)**	**SR850 V3 (7D97 / 7D96)**	**SR860 V3 (7D94 / 7D93)**	**SR950 V3 (7DC5 / 7DC4)**	**SD535 V3 (7DD8 / 7DD1)**	**SD530 V3 (7DDA / 7DD3)**	**SD550 V3 (7DD9 / 7DD2)**	**SR670 V2 (7Z22 / 7Z23)**	**SR675 V3 (7D9Q / 7D9R)**	**ST250 V3 (7DCF / 7DCE)**	**SR250 V3 (7DCM / 7DCL)**
7D3G	6U 800mm Deep Micro Datacenter Rack	N	N	N	N	N	N	N	N	N	N	N	N	N	N	N	N	4
7D3J	6U 1200mm Deep Micro Datacenter Rack	N	N	N	N	N	N	N	N	N	N	N	N	N	N	N	N	4
7D2M	6U Acoustic 1200mm Deep Micro Datacenter Rack	N	N	N	N	N	N	N	N	N	N	N	N	N	N	N	N	4

Table 5. Server support (Part 2 of 4)

		Edge					Super Computing					1S Intel V2			2S Intel V2		
Part Number	**Description**	**SE350 (7Z46 / 7D1X)**	**SE350 V2 (7DA9)**	**SE360 V2 (7DAM)**	**SE450 (7D8T)**	**SE455 V3 (7DBY)**	**SD665 V3 (7D9P)**	**SD665-N V3 (7DAZ)**	**SD650 V3 (7D7M)**	**SD650-I V3 (7D7L)**	**SD650-N V3 (7D7N)**	**ST50 V2 (7D8K / 7D8J)**	**ST250 V2 (7D8G / 7D8F)**	**SR250 V2 (7D7R / 7D7Q)**	**ST650 V2 (7Z75 / 7Z74)**	**SR630 V2 (7Z70 / 7Z71)**	**SR650 V2 (7Z72 / 7Z73)**
7D3G	6U 800mm Deep Micro Datacenter Rack	3[1]	3[1]	N	N	N	N	N	N	N	N	N	N	4	N	N	N
7D3J	6U 1200mm Deep Micro Datacenter Rack	4[2]	4[2]	N	N	N	N	N	N	N	N	N	N	4	N	N	N
7D2M	6U Acoustic 1200mm Deep Micro Datacenter Rack	4[2]	4[2]	N	N	N	N	N	N	N	N	N	N	4	N	N	N

1. The SE350/SE350 V2 is only supported in the 6U 800mm cabinet when installed in the E2 Enclosure. The quantity listed represents the number of enclosures; each enclosure holds two servers.
2. The SE350/SE350 V2 is only supported in the 6U 1200mm cabinet when installed in the E1 Enclosure. The quantity listed represents the number of enclosures; each enclosure holds two servers.

Table 6. Server support (Part 3 of 4)

Part Number	Description	AMD V1					Dense V2				4S V2		8S	4S V1			1S Intel V1			
		SR635 (7Y98 / 7Y99)	SR655 (7Y00 / 7Z01)	SR655 Client OS	SR645 (7D2Y / 7D2X)	SR665 (7D2W / 7D2V)	SD630 V2 (7D1K)	SD650 V2 (7D1M)	SD650-N V2 (7D1N)	SN550 V2 (7Z69)	SR850 V2 (7D31 / 7D32)	SR860 V2 (7Z59 / 7Z60)	SR950 (7X11 / 7X12)	SR850 (7X18 / 7X19)	SR850P (7D2F / 2D2G)	SR860 (7X69 / 7X70)	ST50 (7Y48 / 7Y50)	ST250 (7Y45 / 7Y46)	SR150 (7Y54)	SR250 (7Y52 / 7Y51)
7D3G	6U 800mm Deep Micro Datacenter Rack	N	N	N	N	N	N	N	N	N	N	N	N	N	N	N	N	N	N	4
7D3J	6U 1200mm Deep Micro Datacenter Rack	N	N	N	N	N	N	N	N	N	N	N	N	N	N	N	N	N	N	4
7D2M	6U Acoustic 1200mm Deep Micro Datacenter Rack	N	N	N	N	N	N	N	N	N	N	N	N	N	N	N	N	N	N	4

Table 7. Server support (Part 4 of 4)

Part Number	Description	2S Intel V1								Dense V1			
		ST550 (7X09 / 7X10)	SR530 (7X07 / 7X08)	SR550 (7X03 / 7X04)	SR570 (7Y02 / 7Y03)	SR590 (7X98 / 7X99)	SR630 (7X01 / 7X02)	SR650 (7X05 / 7X06)	SR670 (7Y36 / 7Y37)	SD530 (7X21)	SD650 (7X58)	SN550 (7X16)	SN850 (7X15)
7D3G	6U 800mm Deep Micro Datacenter Rack	N	N	N	N	N	N	N	N	N	N	N	N
7D3J	6U 1200mm Deep Micro Datacenter Rack	N	N	N	N	N	N	N	2	N	N	N	N
7D2M	6U Acoustic 1200mm Deep Micro Datacenter Rack	N	N	N	N	N	N	N	1[1]	N	N	N	N

1. Limited to one SR670 server due to thermal constraints

A specific rail kit is needed to mount supported servers vertically in the 6U rack cabinets.

When installed in one of the 1200mm racks, one of the following rail kits is required:

- SR670: SR670 Vertical Mount Kit, feature BCG5 (machine type 7Y37)
- All other servers: ThinkSystem Toolless Friction Rail Kit, 4M17A11683

When installed in the 800mm rack, the following rail kit is required:

- All servers: ThinkSystem Enclosure Short Rack Rail Kit, 4M17A37605

PDU support

The following power distribution unit (PDU) is supported in the 6U racks:

- DPI Universal Rack PDU, 00YE443

Specifications of the PDU are listed in the following table.

Table 8. Specifications for the DPI Universal Rack PDU, 00YE443

Specification	**DPI Universal Rack PDU, 00YE443**
Rack height	1U half-rack width
Dimensions (H x W x D)	42 x 223 x 115 mm (1.7 x 8.8 x 4.5 inches)
Input voltage	100-240VAC, Single Phase, 50-60 Hz, 16A
Input connector	C19
Outlet connectors	7x C13
Power output capacity	120VAC: 1800W 200VAC: 3000W 208VAC: 3120W 240VAC: 3600W
Power output limit per PDU	15A
Power output limit per outlet	10A

UPS support

The Eaton 5P 1.5kVA Lithium-ion UPS is supported in the 6U rack cabinets. Lenovo resells this UPS. This 1U UPS is available in two models:

- Eaton Model 5P1500R-L, 110V for North America and other countries
- Eaton Model 5P1550GR-L, 200-240V for International

Figure 4. Eaton 5P1500R-L 1U rack mount UPS

Specifications of the models are listed in the following table.

Table 9. Eaton UPS specifications

Eaton model	**5P1500R-L**	**5P1550GR-L**
Power rating (VA/watts)	1440VA / 1100W	1550VA / 1100W
Input Connector	NEMA 5-15P	IEC C14
Output Connectors	5x NEMA 5-15R	6x IEC C13
Dimensions (H x W x D)	43 x 437 x 554 mm (1.7 x 17.2 x 21.8 inches)	43 x 437 x 554 mm (1.7 x 17.2 x 21.8 inches)
Weight	16 kg (35 lb)	16 kg (35 lb)

Runtimes for the UPS are listed in the following table.

Table 10. Runtimes

Load (watts)	**110W**	**220W**	**330W**	**440W**	**550W**	**660W**	**770W**	**880W**	**990W**	**1100W**
5P1550GR-L	70 mins	34 mins	21 mins	14 mins	11 mins	9 mins	7 mins	6 mins	5 mins	4 mins
5P1500R-L	70 mins	34 mins	21 mins	14 mins	11 mins	9 mins	7 mins	6 mins	5 mins	4 mins

More details about the Eaton 5P UPS can be found at this web page:
https://www.eaton.com/us/en-us/catalog/backup-power-ups-surge-it-power-distribution/eaton-5p-ups.html

Door Monitoring System

The NetBotz Rack Monitor 250 environmental monitoring and control system is supported in the Micro Datacenter racks as a door monitoring solution. Lenovo resells this offering.

Figure 5. APC NetBotz Rack Monitor 250 appliance

The APC by Schneider Electric NetBotz Rack Monitor 250 is a rack-mountable central hardware appliance for an environmental monitoring and control system. With the NetBotz 250, you can monitor and control your system using the Web User Interface (Web UI) or Command Line Interface (CLI).

The Rack Monitor 250 includes six ports for connecting temperature and humidity sensors, and other sensors including fluid detection sensors and third-party dry contact sensors. Using other ports on the Rack Monitor 250, you can connect two door switch sensors, two rack door handles, a beacon, and temperature and humidity sensors with digital display.

The offerings being sold through Lenovo include:

- NetBotz 250 Appliance (NBRK0250)
- Door Switch Sensors (NBES0303) – Universal sensor that can help detect access to the rack by unauthorized personnel
- Lock Sensors (NBHN125) – Door-mountable card reader access device that enables remote and local access control to your rack

Details about the appliance can be found at this web page:
https://www.apc.com/shop/us/en/products/NetBotz-Rack-Monitor-250/P-NBRK0250

Warranty

The 6U Micro Datacenter Racks have a 1-year or 3-year warranty depending on the machine type:

- 6U 800mm Deep Micro Datacenter Rack:
  - 7D3F: 1 year
  - 7D3G: 3 year
- 6U 1200mm Deep Micro Datacenter Rack
  - 7D3H: 1 year
  - 7D3J: 3 year
- 6U Acoustic 1200mm Deep Micro Datacenter Rack
  - 7D2A: 1 year
  - 7D2M: 3 year

Agency approvals

The Micro Datacenter rack cabinets comply with the following:

- IEC 60950-1
- UL 2416/UL 60950-1
- CAN/CSA-C22.2 NO. 60950-1
- EIA-310D 19” rack

Related publications

For more information, refer to the following documents:

- Lenovo Press Rack Cabinet Reference:
  https://lenovopress.com/lp1287-lenovo-rack-cabinet-reference
- Product publications for the 6U Micro Datacenter racks:
  https://thinksystem.lenovofiles.com/help/topic/mdc_rackcabinet/ic_introduction.html?cp=6_0
  - Unpacking Instructions
  - User Guide

Related product families

Product families related to this document are the following:

- Rack Cabinets

Notices

Lenovo may not offer the products, services, or features discussed in this document in all countries. Consult your local Lenovo representative for information on the products and services currently available in your area. Any reference to a Lenovo product, program, or service is not intended to state or imply that only that Lenovo product, program, or service may be used. Any functionally equivalent product, program, or service that does not infringe any Lenovo intellectual property right may be used instead. However, it is the user's responsibility to evaluate and verify the operation of any other product, program, or service. Lenovo may have patents or pending patent applications covering subject matter described in this document. The furnishing of this document does not give you any license to these patents. You can send license inquiries, in writing, to:

Lenovo (United States), Inc.
8001 Development Drive
Morrisville, NC 27560
U.S.A.
Attention: Lenovo Director of Licensing

LENOVO PROVIDES THIS PUBLICATION ”AS IS” WITHOUT WARRANTY OF ANY KIND, EITHER EXPRESS OR IMPLIED, INCLUDING, BUT NOT LIMITED TO, THE IMPLIED WARRANTIES OF NON-INFRINGEMENT, MERCHANTABILITY OR FITNESS FOR A PARTICULAR PURPOSE. Some jurisdictions do not allow disclaimer of express or implied warranties in certain transactions, therefore, this statement may not apply to you.

This information could include technical inaccuracies or typographical errors. Changes are periodically made to the information herein; these changes will be incorporated in new editions of the publication. Lenovo may make improvements and/or changes in the product(s) and/or the program(s) described in this publication at any time without notice.

The products described in this document are not intended for use in implantation or other life support applications where malfunction may result in injury or death to persons. The information contained in this document does not affect or change Lenovo product specifications or warranties. Nothing in this document shall operate as an express or implied license or indemnity under the intellectual property rights of Lenovo or third parties. All information contained in this document was obtained in specific environments and is presented as an illustration. The result obtained in other operating environments may vary. Lenovo may use or distribute any of the information you supply in any way it believes appropriate without incurring any obligation to you.

Any references in this publication to non-Lenovo Web sites are provided for convenience only and do not in any manner serve as an endorsement of those Web sites. The materials at those Web sites are not part of the materials for this Lenovo product, and use of those Web sites is at your own risk. Any performance data contained herein was determined in a controlled environment. Therefore, the result obtained in other operating environments may vary significantly. Some measurements may have been made on development-level systems and there is no guarantee that these measurements will be the same on generally available systems. Furthermore, some measurements may have been estimated through extrapolation. Actual results may vary. Users of this document should verify the applicable data for their specific environment.

© Copyright Lenovo 2024. All rights reserved.

This document, LP1285, was created or updated on September 6, 2022.

Send us your comments in one of the following ways:

- Use the online Contact us review form found at:
  https://lenovopress.lenovo.com/LP1285
- Send your comments in an e-mail to:
  comments@lenovopress.com

This document is available online at https://lenovopress.lenovo.com/LP1285.

Trademarks

Lenovo and the Lenovo logo are trademarks or registered trademarks of Lenovo in the United States, other countries, or both. A current list of Lenovo trademarks is available on the Web at https://www.lenovo.com/us/en/legal/copytrade/.

The following terms are trademarks of Lenovo in the United States, other countries, or both:
Lenovo®
RackSwitch
ThinkSystem®

The following terms are trademarks of other companies:

Intel® is a trademark of Intel Corporation or its subsidiaries.

Other company, product, or service names may be trademarks or service marks of others.